DE-67009

ESTADO LIBRE ASOCIADO DE PUERTO RICO
AUTORIDAD DE ENERGÍA ELÉCTRICA
SAN JUAN, PUERTO RICO

INFORME COMPLEMENTARIO NÚMERO 1
CP-02-26

HÉCTOR R. ROSARIO, M.B.A.,C.P.A.
DIRECTOR EJECUTIVO

Estado Libre Asociado de Puerto Rico
OFICINA DEL CONTRALOR
San Juan, Puerto Rico

PLAN DE ACCIÓN CORRECTIVA
Oficina de Combustibles –Sistema Eléctrico Autoridad de Energía Eléctrica de Puerto Rico

Entidad Núm.: 3075

Informe de Auditoría Núm.: CP 02-26 Fecha: 13 de mayo de 2002

Funcionario principal: CPA Héctor Rosario Hernández

Periodo auditado: 1 de enero de 1998 al 30 de junio de 2001

Funcionario designado: CPA José F. Hernández Colón

Puesto: Adm. Interino Oficina de Auditoría Interna Teléfono: 289-4813

Indique: [ ] PAC [X] ICP #1

Fecha de vencimiento: 1 de febrero de 2003

RECOMENDACIÓN	ACCIÓN CORRECTIVA	RESULTADO
A la Secretaria de Justicia 1. Considerar las situaciones que se comentan en este informe y tomar las medidas que correspondan. *[Hallazgo 1 al 9]*	La Secretaria de Justicia contestará el Plan de Acción Correctiva.	Esta recomendación es dirigida a la Secretaria de Justicia, no le corresponde a la Autoridad de Energía Eléctrica la contestación de la misma. La Oficina del Contralor de Puerto Rico refirió el Informe de Auditoría CP-02-26 a la Oficina de la Honorable Anabelle Rodríguez, Secretaria de Justicia. Personal del Departamento de Justicia contestará el Plan de Acción Correctiva directamente a la Oficina del Contralor de Puerto Rico.
Al Secretario de Hacienda 2. Evaluar las situaciones señaladas en los *hallazgos 2.c)2 y 5.a.3)* y tomar las medidas que correspondan.	El Secretario de Hacienda contestará el Plan de Acción Correctiva.	Esta recomendación es dirigida al Secretario de Hacienda, no le corresponde a la Autoridad de Energía Eléctrica la contestación de la misma. La Oficina del Contralor de Puerto Rico refirió el Informe de Auditoría CP-02-26 a la Oficina de del Honorable Juan A. Flores Galarza, Secretario de Hacienda. Personal del Departamento de Hacienda contestará el Plan de Acción Correctiva directamente a la Oficina del Contralor de Puerto Rico.
A la Junta de Gobierno de la AEE 3. Requerir al Director Ejecutivo de la AEE que someta para su aprobación, en un tiempo razonable, las normas y los procedimientos necesarios para regir las funciones de los laboratorios internos y el subarrendamiento	La Autoridad está en proceso de evaluación de las operaciones de sus laboratorios internos para determinar el alcance de sus funciones y los cambios administrativos, si algunos, requeridos. Una vez concluya este proceso, se definirán y establecerán las normas y procedimientos que	**Parcialmente Cumplimentada** En la Autoridad estamos en proceso evaluativo de las operaciones de los laboratorios internos para determinar las funciones operacionales y administrativas de los mismos. Este proceso de evaluación, preparación y aprobación del Plan de

Certifico que esta información es correcta 01/30/03

Firma Funcionario Principal

Estado Libre Asociado de Puerto Rico
OFICINA DEL CONTRALOR
San Juan, Puerto Rico

PLAN DE ACCIÓN CORRECTIVA
Oficina de Combustibles –Sistema Eléctrico Autoridad de Energía Eléctrica de Puerto Rico

RECOMENDACIÓN	ACCIÓN CORRECTIVA	RESULTADO
de los tanques de reserva de combustibles. *[Hallazgos 6-a.1)y 8-a.1)y 2)]*	regirán las operaciones de éstos. El actual contrato con CORCO indica en su cláusula XXI que la asignación total o en parte de los servicios debe realizarse con el consentimiento previo y escrito de la otra parte. Estamos coordinando una serie de reuniones con representantes de CORCO para atender esta situación. status	Acción de los laboratorios deberá completarse aproximadamente para marzo de 2003. Una vez completemos este proceso entraremos a la fase de las operaciones de los laboratorios. Cuando los laboratorios estén operando debidamente, podremos cumplimentar esta recomendación. El Administrador de la Oficina de Combustibles solicitó a la Oficina de Estudios y Procedimientos la revisión de los puntos 12 y 14 del Procedimiento de Recobro por Uso de Tanques de Combustible, según solicitado el 28 de octubre de 2002, por la Oficina del Contralor de Puerto Rico. La Autoridad evaluará los términos y condiciones del subarrendamiento contenidos en los contratos de suministro de combustible entre la Autoridad y el suplidor, e incluirá cláusulas que protejan los intereses de la entidad.
4. Tomar las medidas necesarias para asegurarse que el Director Ejecutivo de la AEE cumpla con las recomendaciones 5 a la 14. *[Hallazgos 1 al 9]*	El Comité de Auditoría de la Junta de Gobierno celebra reuniones mensuales para dar seguimiento a la implantación de las recomendaciones sobre estos hallazgos.	**Parcialmente Cumplimentada**
Al Director Ejecutivo 5. Tomar medidas para que: a. Se cumpla con las disposiciones de las leyes ambientales que regulan la contaminación del ambiente y evitar así la imposición de multas por parte de las agencias reguladoras y preservar la	Debido a la complejidad y los numerosos procesos y equipos envueltos en la producción de electricidad, no es posible garantizar el que no se exceda en alguna ocasión los parámetros establecidos por las reglamentaciones ambientales que regulan las operaciones de la Autoridad. Las agencias reguladoras del ambiente tienen por	**Cumplimentada** La Autoridad es una empresa comprometida con el ambiente y procura mantener el mayor grado de cumplimiento posible en sus operaciones. No obstante, en su función de producir energía eléctrica utiliza varios equipos mecánicos, los cuales constan de muchas partes y es compleja su operación. Cualquier falla en

Iniciales

Estado Libre Asociado de Puerto Rico
OFICINA DEL CONTRALOR
San Juan, Puerto Rico

PLAN DE ACCIÓN CORRECTIVA
Oficina de Combustibles –Sistema Eléctrico Autoridad de Energía Eléctrica de Puerto Rico

RECOMENDACIÓN	ACCIÓN CORRECTIVA	RESULTADO
salud del pueblo. [Hallazgo 1-a]	norma, discreción administrativa para imponer sanciones cuando entiendan que una entidad reguladora no mantiene un nivel de cumplimiento aceptable. Esto es, en el mundo real es previsible, y así se reconoce, que en ocasiones las entidades reguladoras puedan tener problemas operacionales que, técnicamente, constituyan desviaciones de alguna norma o estándar. Las entidades reguladoras toman entonces en consideración el nivel o récord de cumplimiento antes de decidir imponer alguna sanción. Es la meta de la Autoridad mantener unos niveles de cumplimiento razonables y aceptables para las agencias reguladoras y, así, evitar estar expuestos al pago de multas. Nuestra agencia fue una de las pioneras en desarrollar e implantar programas y procedimientos dirigidos a cumplir con los reglamentos ambientales estatales y federales aplicables. Además, cuenta con un área administrativa (División de Protección Ambiental y Confiabilidad de Calidad), cuya función es velar que las operaciones de la Autoridad las efectúen en acuerdo con los reglamentos ambientales. No obstante lo anterior, la Autoridad ha tomado las siguientes medidas para mejorar y mantener el nivel de cumplimiento ambiental: • Se completaron todos los proyectos de construcción establecidos bajo la Sección de Calidad de Aire del Acuerdo para mejorar la operación de las unidades generatrices y disminuir la opacidad de las emisiones al aire, a un costo aproximado de	estos equipos puede producir un incidente de incumplimiento a alguno de los varios permisos ambientales que poseemos. Además, el programa de mantenimiento de las centrales, la Autoridad ha realizado unas mejoras, y para mantener el nivel de cumplimiento ambiental, en su más reciente enmienda del Acuerdo por Consentimiento acordó que en las Centrales de Palo Seco y San Juan utilizará para quemar, combustible con un contenido de azufre de 0.50%. En las Centrales de Costa Sur y Aguirre, a pesar que los permisos de operación le exige 1.5% de contenido de azufre en el combustible a quemar, estamos comprando combustible de 1.0%.

Iniciales

Estado Libre Asociado de Puerto Rico
OFICINA DEL CONTRALOR
San Juan, Puerto Rico

PLAN DE ACCIÓN CORRECTIVA
Oficina de Combustibles –Sistema Eléctrico Autoridad de Energía Eléctrica de Puerto Rico

RECOMENDACIÓN	ACCIÓN CORRECTIVA	RESULTADO
	$78,000,000. Actualmente, hemos alcanzado alrededor de un 98% de cumplimiento con respecto a la opacidad medida dentro de las chimeneas. • La Autoridad completó los proyectos de construcción establecidos bajo la Sección de Calidad de Agua del Acuerdo para mejorar la calidad de las descargas líquidas de las centrales, a un costo aproximado de $96,000,000. Actualmente, hemos alcanzado un 99% de cumplimiento en esta área. Se comenzó a trabajar bajo el Programa de Asistencia a Cumplimiento de la EPA (Agencia Federal de Protección Ambiental, por sus siglas en inglés), con el propósito de detectar y eliminar incidentes esporádicos y negociar la terminación de este programa bajo el Acuerdo. • Se optimizaron las operaciones de las unidades generatrices y las actividades de mantenimiento en las centrales. • Se modificaron las especificaciones del combustible a ser adquirido por la Autoridad reduciendo la concentración de varios componentes para disminuir emisiones de particulado y otros contaminantes. • Se comenzó hace alrededor de dos años a quemar en las centrales del área sur, de forma voluntaria, combustible con una concentración de azufre de 1.0% (nuestros	

Iniciales

Estado Libre Asociado de Puerto Rico
OFICINA DEL CONTRALOR
San Juan, Puerto Rico

PLAN DE ACCIÓN CORRECTIVA
Oficina de Combustibles –Sistema Eléctrico Autoridad de Energía Eléctrica de Puerto Rico

RECOMENDACIÓN	ACCIÓN CORRECTIVA	RESULTADO
	permisos de operación permiten la quema de combustible con un contenido de azufre de hasta 1.5%). • Recientemente se acordó comenzar a quemar en el área norte, en un futuro cercano y por un período de prueba de dos años, combustible con un contenido de azufre de 0.50%. • Se crearon plazas adicionales en las centrales generatrices dirigidas a velar por el cumplimiento ambiental. Las medidas implantadas han sido efectivas, lo que se ha reflejado en una reducción drástica en el pago por concepto de penalidades estipuladas bajo el Acuerdo en los Programas de Aire y Agua. Ello demuestra un nivel de cumplimiento ascendente y sostenido. Además, se ha mantenido cumplimiento con las reglamentaciones y disposiciones relacionadas a las leyes CERCLA (Comprehensive Enviromental Response, Compensation and Liability Act), EPCRA (Enviromental Planning and Community Right to Know Act) y RCRA (Resources Conservation and Recovery Act).	
c. Los contratos se formalicen antes de que se comiencen a recibir los bienes y servicios. *[Hallazgos 2-a.2)a)]*	El combustible que la Autoridad compra es para la generación de electricidad y se adquiere a través de subastas públicas. Para éste, se invita a toda compañía que se identifique en la industria interesada en participar. Reconocemos que en años anteriores, para dicho proceso, se invitaban a aquellas compañías que estuviesen en la Lista de	**Cumplimentada** El Director de Servicios Administrativos impartió instrucciones al Jefe de la División de Suministros indicándole que no podrá invitar a ningún licitador que no pertenezca al Registro de Proveedores Calificados de la Autoridad. Si un licitador desea participar de nuestro proceso de subasta puede traer los

Iniciales

Estado Libre Asociado de Puerto Rico
OFICINA DEL CONTRALOR
San Juan, Puerto Rico

PLAN DE ACCIÓN CORRECTIVA
Oficina de Combustibles –Sistema Eléctrico Autoridad de Energía Eléctrica de Puerto Rico

RECOMENDACIÓN	ACCIÓN CORRECTIVA	RESULTADO
	Proveedores Registrados de la Autoridad y a otros suplidores identificados en la industria de combustible, aún cuando no estuviesen en dicha lista. En la medida en que se invite a más suplidores, la Autoridad fomenta la competitividad en las ofertas recibidas y asegura adquirir el combustible al menor precio posible. Es importante señalar, que la Autoridad necesita obtener el precio más bajo posible para garantizarle al Pueblo de Puerto Rico el costo de electricidad más bajo, debido a que el costo de combustible se transfiere a los consumidores a través de la cláusula de ajuste de combustible. A pesar de que las subastas fueron adjudicadas, comenzaron la entrega de combustible sin firmar los contratos, toda vez que los licitadores no proveyeron los documentos requeridos para poder otorgar contratos con el gobierno. Pero, mucho de los suplidores no tienen oficinas locales ni están dedicados a hacer negocios en Puerto Rico. Reconocemos que esto se aparta de las normas de contratación. Sin embargo, la Autoridad hizo lo necesario en ese momento, pues no tenía otras alternativas ya que, era imprescindible para la Autoridad recibir el combustible. Para atender esta recomendación, le solicitamos al Jefe de Suministros que convoque a los posibles suplidores para que sometan los documentos necesarios, de manera que se evalúen y se incluyan en la Lista de Proveedores Registrados de la Autoridad.	documentos requeridos y solicitar registrarse en nuestro Registro de Proveedores Calificados. Para poder participar de la subasta la Autoridad tiene que cualificarlo antes de la apertura de la misma. Al mantener nuestro Registro de Proveedores actualizado con todos los documentos requeridos, podremos evitar recibir los bienes y servicios antes de firmar los contratos correspondientes. La Oficina de Auditoría Interna verificó los contratos expedidos y expedientes de la Oficina de Combustibles. Concluimos la Autoridad formalizó los contratos antes de recibir los bienes y servicios. **Anejo A**

Iniciales

Estado Libre Asociado de Puerto Rico
OFICINA DEL CONTRALOR
San Juan, Puerto Rico

PLAN DE ACCIÓN CORRECTIVA
Oficina de Combustibles –Sistema Eléctrico Autoridad de Energía Eléctrica de Puerto Rico

RECOMENDACIÓN	ACCIÓN CORRECTIVA	RESULTADO
d. No se repitan situaciones como las comentadas en los *hallazgos 2-a.2)b) y c)2) y 4-a.1).*	Se preparó un registro de contratos mecanizado para simplificar la búsqueda de información de los mismos. Hallazgo 2-a.2)b) El Directorado de Servicios Administrativos, División de Suministros, actualizó el Registro de Proveedores Calificados de la Autoridad. Para cualificarlos, le solicitaron a los licitadores los documentos requeridos por el Departamento de Hacienda y la Oficina del Contralor, para poder otorgar contratos con el gobierno. Además, para ingresar en nuestro Registro, la Autoridad evalúa la capacidad económica, pericia técnica, procedimientos, y certificaciones de las compañías. También requerimos la Certificación del Registro Único de Licitadores que provee al Administración de Servicios Generales. Los expedientes de los licitadores que están registrados en nuestra lista están completos, de otra forma no pueden participar de nuestras subastas. Estas fueron las instrucciones impartidas al Jefe de Suministros, que es el encargado de invitar a los licitadores a las subastas públicas. Hallazgo 2-a.2)c)2) La Autoridad acogerá las recomendaciones de la Oficina del Contralor, y velará porque las decisiones y cambios que afecten significativamente las operaciones de nuestra agencia estén documentadas detalladamente	**Cumplimentada** Evaluamos el Registro de los Contratos preparado por la Oficina de Combustibles. El mismo lo podemos obtener a través del sistema de información de la Oficina de Combustibles. Éste incluye información relacionada con los contratos otorgados, vigentes y cancelados. Hallazgo 2-a.2)b. **Anejo A** La Autoridad acogerá las recomendaciones de la Oficina del Contralor, y velará porque las decisiones y cambios que afecten significativamente las operaciones de nuestra agencia estén documentadas detalladamente conforme a lo dispuesto en la Ley Núm. 230 Hallazgo 4-a.1 El Director de Servicios Administrativos impartió instrucciones al Jefe de Suministros indicando que no podrá invitar a las subastas ningún licitador que no pertenezca y esté actualizado en el Registro de Proveedores Calificados de la Autoridad. Si un licitador desea participar de nuestro proceso de subasta puede traer los documentos requeridos y solicitar registrarse en nuestro Registro de Proveedores Calificados. Para poder participar de la subasta la Autoridad tiene que cualificarlo antes de la apertura de la misma. Además, impartió instrucciones en relación con el Registro Único de Licitadores. Hallazgo 2-a.2) Las Pruebas realizadas por la Oficina de Auditoría Interna reflejan que los proveedores de combustibles a los que se le otorgó contrato durante el 2002, pertenecen a nuestro Registro de Proveedores de

Iniciales

Estado Libre Asociado de Puerto Rico
OFICINA DEL CONTRALOR
San Juan, Puerto Rico

PLAN DE ACCIÓN CORRECTIVA
Oficina de Combustibles –Sistema Eléctrico Autoridad de Energía Eléctrica de Puerto Rico

RECOMENDACIÓN	ACCIÓN CORRECTIVA	RESULTADO
	conforme a lo dispuesto en la Ley Núm. 230. (Hallazgo 4-a.1)	Calificados de la Autoridad. Nuestras pruebas revelaron que aunque la Autoridad ha realizado gestiones para que los proveedores formen parte del Registro Único de Licitadores, éstos no forman parte del mismo. La compra de combustibles es vital para nuestras operaciones, por esto la Autoridad firmó los contratos con estos proveedores. No obstante, la Autoridad continuará realizado gestiones para asegurar que dichos suplidores formen parte del Registro Único de Licitadores. **Anejo A y D**
e. Todo proveedor de la AEE esté previamente inscrito en el Registro de Suplidores Calificados. *[Hallazgos 2-a.2)c)1) y 5-b].*	El Directorado de Servicios Administrativos, División de Suministros actualizó el Registro de Proveedores Calificados de la Autoridad. Para ingresar en nuestro Registro, la Autoridad evalúa la capacidad económica, pericia técnica, procedimientos y certificaciones de las compañías.	**Cumplimentada** El Director de Servicios Administrativos impartió instrucciones al Jefe de Suministros indicando que no podrá invitar a las subastas ningún licitador que no pertenezca y esté actualizado en el Registro de Proveedores Calificados de la Autoridad. Si un licitador desea participar de nuestro proceso de subasta puede traer los documentos requeridos y solicitar registrarse en nuestro Registro de Proveedores Calificados. Para poder participar de la subasta la Autoridad tiene que cualificarlo antes de la apertura de la misma. Además, impartió instrucciones en relación con el Registro Único de Licitadores. Las Pruebas realizadas por la Oficina de Auditoría Interna reflejan que los proveedores de combustibles a los que se le otorgó contrato durante el 2002, pertenecen a nuestro Registro de Proveedores de Calificados de la Autoridad. Nuestras pruebas revelaron que aunque la Autoridad ha real gestiones para que los proveedores form Registro Único de Licitadores, éstos

Estado Libre Asociado de Puerto Rico
OFICINA DEL CONTRALOR
San Juan, Puerto Rico

PLAN DE ACCIÓN CORRECTIVA
Oficina de Combustibles –Sistema Eléctrico Autoridad de Energía Eléctrica de Puerto Rico

RECOMENDACIÓN	ACCIÓN CORRECTIVA	RESULTADO
		del mismo. La compra de combustibles es vital para nuestras operaciones, por esto la Autoridad firmó los contratos con estos proveedores. No obstante, la Autoridad continuará realizado gestiones para asegurar que dichos suplidores formen parte del Registro Único de Licitadores. **Anejo A y D**
f. Se utilicen adecuadamente los informes producidos por los laboratorios internos de la AEE para corroborar los certificados de calidad presentados por los distribuidores de combustibles. Además, sirven como evidencia para realizar ajustes o reclamaciones en caso de deficiencias en la entrega de los mismos. *[Hallazgo 6-a.3]*	La Autoridad está en proceso de evaluación de las operaciones de sus laboratorios internos para determinar el alcance de sus funciones y los cambios administrativos, si algunos, requeridos. Una vez concluya este proceso, se definirán y establecerán las normas y procedimientos que regirán las operaciones de éstos.	**Parcialmente Cumplimentada** En la Autoridad estamos en proceso evaluativo de las operaciones de los laboratorios internos para determinar las funciones operacionales y administrativas de los mismos. Este proceso de evaluación, preparación y aprobación del Plan de Acción de los laboratorios deberá completarse aproximadamente para marzo de 2003. Una vez completemos este proceso entraremos a la fase de las operaciones de los laboratorios. Cuando los laboratorios estén operando debidamente podremos cumplimentar esta recomendación.
6. Instruir al Administrador de la Oficina de Auditoría Interna para que realice pruebas y valide los resultados presentados por los laboratorios internos de la AEE sobre las pruebas de composición química y de calidad de los combustibles adquiridos para la generación de energía eléctrica. Además, notifique a la Junta de Gobierno en aquellos casos en que se detecten diferencias o anomalías en el proceso. *[Hallazgos 4 y 5]*	La Autoridad está en proceso de evaluación de las operaciones de sus laboratorios internos para determinar el alcance de sus funciones y los cambios administrativos, si algunos, requeridos. Una vez concluya este proceso, se definirán y establecerán las normas y procedimientos que regirán las operaciones de éstos.	**Parcialmente Cumplimentada** En la Autoridad estamos en proceso evaluativo de las operaciones de los laboratorios internos para determinar las funciones operacionales y administrativas de los mismos. Este proceso de evaluación, preparación y aprobación del Plan de Acción de los laboratorios deberá completarse aproximadamente para marzo de 2003. Una vez completemos este proceso entraremos a la fase de las operaciones de los laboratorios. Cuando los laboratorios estén operando debidamente, podremos cumplimentar esta recomendación.

Iniciales

Estado Libre Asociado de Puerto Rico
OFICINA DEL CONTRALOR
San Juan, Puerto Rico

PLAN DE ACCIÓN CORRECTIVA
Oficina de Combustibles –Sistema Eléctrico Autoridad de Energía Eléctrica de Puerto Rico

RECOMENDACIÓN	ACCIÓN CORRECTIVA	RESULTADO
7. Impartir instrucciones al Administrador de la Oficina de Combustibles, y ver que cumpla, para que: c. Se requiera de las compañías proveedoras que las pruebas de composición química y de calidad de los combustibles sean realizadas por los laboratorios contratados por éstas, directamente de los tanques de las barcazas que realizarán las entregas y no de los tanques terrestres. En los casos de transferencias mediante oleoducto, las pruebas se realicen en los tanques del proveedor antes de que se realice la transferencia a la AEE. *[Hallazgo 3-b]*	En el caso de entregas mediante barcazas la Autoridad sostiene que al analizar el tanque de combustible y posteriormente confirmar mediante pruebas de densidad y contenido de azufre que el combustible en la barcaza demuestra ser homogéneo con el combustible en el tanque del cual se llena la barcaza, atiende la preocupación de la OCPR en cuanto a que *"se verifique la composición química del combustible adquirido para asegurarse, con anterioridad, si los combustibles cumplen con las especificaciones establecidas en los contratos de compra, y que el precio que se paga, sea el correspondiente a la calidad del combustible que se está recibiendo."* En cuanto a las otras formas de entrega señalamos que la Autoridad esta recibiendo en el mismo según recomendado por varios años previo a este informe y al periodo que cubre el mismo.	**Cumplimentada** En las entregas de combustibles que se realizan mediante la importación del mismo a la isla la Autoridad exige un certificado de calidad, que se realiza al tanque del proveedor antes de comenzar la transferencia. Estas muestras son realizadas en los tanques de CORCO y CAPECO. En el caso de entregas mediante barcazas y que el combustible haya sido mezclado en Puerto Rico, se realizan pruebas adicionales para corroborar que el combustible que se entrega es homogéneo. Además, sometimos copia del estándar de la ***American Society for Testing and Materials* ASTM D 4057-95 (2000)**, el cual es el requerido en nuestros contratos para realizar el muestreo de combustible y en el cual se demuestra que la metodología utilizada actualmente por la Autoridad esta aceptada. **Anejo B, sección 11, pág. 7**
8. Instruir a la Consultora Jurídica para que evalúe las situaciones comentadas en el *Hallazgo 4-b.1) al 4)* y tomar las medidas correctivas necesarias, incluyendo aquellas de índole legal, para poder resarcir a la AEE de los daños y perjuicios, si alguno, que pudieran haber causado las acciones del laboratorio privado contratado y de los proveedores de combustibles.	Referente a los contratos debemos mencionar que se evalúa el poder identificar y evaluar distintos laboratorios establecidos en Puerto Rico que puedan prestar los servicios. Una vez, identificados, se cualificarán por la División de Suministros. Como medida prudente, se preparará un contrato de servicios profesionales a requerimiento que se otorgará con los laboratorios registrados y cualificados. Por otra parte, con relación a la investigación del caso del laboratorio privado, podemos manifestar que la Autoridad continúa su investigación y a base	**Parcialmente Cumplimentada** La Oficina de la Consultora Jurídica está evaluando la preparación de un contrato de servicios profesionales a requerimiento que otorgaremos a los laboratorios registrados y cualificados por la División de Suministros de la Autoridad. Referente a la investigación del caso del laboratorio privado, la Autoridad presentó el 12 de agosto de 2002, una demanda en el Tribunal Federal en contra del laboratorio privado por alegada alteración de las pruebas de certificación de la calidad del combustible.

Iniciales

Estado Libre Asociado de Puerto Rico
OFICINA DEL CONTRALOR
San Juan, Puerto Rico

PLAN DE ACCIÓN CORRECTIVA
Oficina de Combustibles –Sistema Eléctrico Autoridad de Energía Eléctrica de Puerto Rico

RECOMENDACIÓN	ACCIÓN CORRECTIVA	RESULTADO
	de lo que resulte tomará la determinación que corresponda y que mejor proteja los intereses de la Autoridad.	
9. Se formalicen contratos escritos para: a. Los servicios de los laboratorios privados que incluyan, entre otras cláusulas, disposiciones que protejan adecuadamente los intereses de la AEE como las que se señalan en el *Hallazgo 5-a.1.*	La Oficina de la Consultora Jurídica evalúa como firmar contratos de requerimiento con estos laboratorios que a su vez brindan servicios a nuestros suplidores y que esto no presente un conflicto de interés para el laboratorio.	**Parcialmente Cumplimentada** La Oficina de la Consultora Jurídica está evaluando la preparación de un contrato de servicios profesionales a requerimiento que otorgaremos a los laboratorios registrados y cualificados por la División de Suministros de la Autoridad.
b. El subarrendamiento de los tanques de reserva de combustibles. *[Hallazgo 8-a.2]*	No es necesario corregir este señalamiento. Los contratos de suministro de combustible entre la AEE y sus suplidores contienen disposiciones que regulan el uso de los tanques de combustible por parte del suplidor.	**Parcialmente Cumplimentada** La Autoridad evaluará los términos y condiciones del subarrendamiento contenidos en los contratos de suministro de combustible entre la Autoridad y el suplidor, e incluirá cláusulas que protejan los intereses de la entidad.
10. Instruir al Director de Finanzas, y ver que cumpla, para que: a. Se realice una preintervención adecuada de las solicitudes de servicios, las facturas y demás justificantes relacionados con los pagos a laboratorios por las pruebas de composición química y de calidad de los combustibles. *[Hallazgo 5-a.2]*	Para procesar las facturas, nuestro sistema de pago requiere tres documentos: Orden de Compra, Informe de Recibo y Factura. Entendemos que cumplimos con este requisito en todos los pagos procesados. El documento Solicitud de Servicios de Inspectores no es necesario en el proceso de pago.	**Cumplimentada** Actualmente, la Oficina de Combustibles envía las facturas y los documentos relacionados con las mismas al Directorado de Finanzas, Sección de Comprobantes de Desembolsos. Incluyen en éstos las certificaciones realizadas por el suplidor, factura del suplidor, factura preparada por la Oficina de Combustibles, los informes de recibo de la central y los documentos relacionados con el volumen, temperatura y cantidades de la barcaza. Verificamos varias facturas y sus documentos relacionados con las compras del combustible No.6. Examinamos los Certificados de Calidad suministrados por el suplidor y los que la Autoridad solicita a los laboratorios privados.

Iniciales

Estado Libre Asociado de Puerto Rico
OFICINA DEL CONTRALOR
San Juan, Puerto Rico

PLAN DE ACCIÓN CORRECTIVA
Oficina de Combustibles –Sistema Eléctrico Autoridad de Energía Eléctrica de Puerto Rico

RECOMENDACIÓN	ACCIÓN CORRECTIVA	RESULTADO
		Referente a las pruebas solicitadas por su oficina en la carta del 28 de octubre de 2002, la Oficina de Auditoría Interna verificó que los análisis de laboratorios estén certificados por un químico licenciado en Puerto Rico, conteniendo la firma y el sello de los mismos. Además, de corroborar el cumplimiento de las instrucciones impartidas. Anejo L - Plan de Acción Correctiva del 31 de agosto de 2002. El Director Ejecutivo impartió instrucciones al Director de Finanzas para que realice una preintervención adecuada de las solicitudes de servicios, facturas y demás justificantes relacionados con los pagos a laboratorios por las pruebas de composición química y de calidad de los combustibles. **Anejo C**
11. Establecer las normas y los procedimientos necesarios para: a. Regir las funciones de los laboratorios internos. *[Hallazgo 6-a.1]*	La Autoridad está en proceso de evaluación de las operaciones de sus laboratorios internos para determinar el alcance de sus funciones y los cambios administrativos, si algunos, requeridos. Una vez concluya este proceso, se definirán y establecerán las normas y procedimientos que regirán las operaciones de éstos.	**Parcialmente Cumplimentada** En la Autoridad estamos en proceso evaluativo de las operaciones de los laboratorios internos para determinar las funciones operacionales y administrativas de los mismos. Este proceso de evaluación, preparación y aprobación del Plan de Acción de los laboratorios deberá completarse aproximadamente para marzo de 2003. Una vez completemos este proceso entraremos a la fase de las operaciones de los laboratorios. Cuando los laboratorios estén operando debidamente, podremos cumplimentar esta recomendación.
b. El arrendamiento y subarrendamiento de los tanques de reserva de combustible. *[Hallazgo 8-a.1]*	Establecimos el Procedimiento de Recobro por uso de Tanques de Combustibles para regular esta actividad de recobro por el uso de las facilidades. En estos momentos la Oficina de Estudios y	**Parcialmente Cumplimentada** El Administrador de la Oficina de Combustibles solicitó a la Oficina de Estudios y Procedimientos la revisión de los puntos 12 y 14 del Procedimiento de Recobro por

Iniciales

Estado Libre Asociado de Puerto Rico
OFICINA DEL CONTRALOR
San Juan, Puerto Rico

PLAN DE ACCIÓN CORRECTIVA
Oficina de Combustibles –Sistema Eléctrico Autoridad de Energía Eléctrica de Puerto Rico

RECOMENDACIÓN	ACCIÓN CORRECTIVA	RESULTADO
	Procedimientos está revisando los puntos 12 y 14 del procedimiento preparado según lo solicitara la Oficina del Contralor de Puerto Rico el 28 de octubre de 2002.	Uso de Tanques de Combustible, según solicitado el 28 de octubre de 2002, por la Oficina del Contralor de Puerto Rico.
12. Impartir instrucciones a los Jefes de las Centrales Generatrices, y ver que cumplan, para que: Los químicos de la AEE tomen sus muestras directamente de las barcazas, barcos o tanques del suplidor antes de cada transferencia de los combustibles para determinar si los mismos cumplen con las especificaciones estipuladas en los contratos de compra. *[Hallazgo 3-c) y d) y 6-a.2)]*	La Autoridad está en proceso de evaluación de las operaciones de sus laboratorios internos para determinar el alcance de sus funciones y los cambios administrativos, si algunos, requeridos. Una vez concluya este proceso, se definirán y establecerán las normas y procedimientos que regirán las operaciones de éstos.	**Parcialmente Cumplimentada** En la Autoridad estamos en proceso evaluativo de las operaciones de los laboratorios internos para determinar las funciones operacionales y administrativas de los mismos. Este proceso de evaluación, preparación y aprobación del Plan de Acción de los laboratorios deberá completarse aproximadamente para marzo de 2003. Una vez completemos este proceso entraremos a la fase de las operaciones de los laboratorios. Cuando los laboratorios estén operando debidamente, podremos cumplimentar esta recomendación.
b. Los encargados de los laboratorios internos de la AEE sometan fotocopia certificada de los informes producidos sobre las pruebas de composición química y calidad realizadas a los combustibles recibidos al: 1. Administrador de la Oficina de Combustibles para su conocimiento y validación de las facturas de los proveedores. *[Hallazgo 6-a.3]* 2. Director de Planificación y Protección Ambiental para que determine si los combustibles cumplen con las disposiciones	La Autoridad está en proceso de evaluación de las operaciones de sus laboratorios internos para determinar el alcance de sus funciones y los cambios administrativos, si algunos, requeridos. Una vez concluya este proceso, se definirán y establecerán las normas y procedimientos que regirán las operaciones de éstos.	**Parcialmente Cumplimentada** En la Autoridad estamos en proceso evaluativo de las operaciones de los laboratorios internos para determinar las funciones operacionales y administrativas de los mismos. Este proceso de evaluación, preparación y aprobación del Plan de Acción de los laboratorios deberá completarse aproximadamente para marzo de 2003. Una vez completemos este proceso entraremos a la fase de las operaciones de los laboratorios. Cuando los laboratorios estén operando debidamente, podremos cumplimentar esta recomendación.

Iniciales

Estado Libre Asociado de Puerto Rico
OFICINA DEL CONTRALOR
San Juan, Puerto Rico

PLAN DE ACCIÓN CORRECTIVA
Oficina de Combustibles –Sistema Eléctrico Autoridad de Energía Eléctrica de Puerto Rico

RECOMENDACIÓN	ACCIÓN CORRECTIVA	RESULTADO
establecidas por la EPA. *[Hallazgo 6-a.3]* 3. Director de Finanzas para la certificación y pago de las facturas correspondientes. *[Hallazgo 6-a.3]*		
d. Los trabajos que realicen los laboratorios privados relacionados con los combustibles se lleven a cabo, según se estipula en los métodos aceptados por la profesión de químicos y los Estándares del American Petroleum Institute para que: 1. Se tome la temperatura en todos los tanques de las barcazas o barcos que realizan las entregas de combustibles a la Autoridad. *[Hallazgo 7-a.2) a)]*	Esta actividad se realiza para determinar el combustible que se encuentra en la embarcación. La Autoridad paga por el combustible que recibe en sus facilidades y no por el que llega en la embarcación, por lo cual no es necesario realizar esta actividad.	**Parcialmente Cumplimentada** En la Autoridad estamos en proceso evaluativo de las operaciones de los laboratorios internos para determinar las funciones operacionales y administrativas de los mismos. Este proceso de evaluación, preparación y aprobación del Plan de Acción de los laboratorios deberá completarse aproximadamente para marzo de 2003. Una vez completemos este proceso entraremos a la fase de las operaciones de los laboratorios. Cuando los laboratorios estén operando debidamente, podremos cumplimentar esta recomendación.
2. La temperatura sea tomada a varios niveles de profundidad de cada tanque en la barcaza o barco. *[Hallazgo 7-a.2)b)]*	Esta actividad se realiza para determinar el combustible que se encuentra en la embarcación. La AEE paga por el combustible que se recibe en sus facilidades y no por el que llega en la embarcación, por lo cual no es necesario realizar esta actividad.	**Parcialmente Cumplimentada** En la Autoridad estamos en proceso evaluativo de las operaciones de los laboratorios internos para determinar las funciones operacionales y administrativas de los mismos. Este proceso de evaluación, preparación y aprobación del Plan de Acción de los laboratorios deberá completarse aproximadamente para marzo de 2003. Una vez completemos este proceso entraremos a la fase de las operaciones de los laboratorios. Cuando los laboratorios estén operando debidamente, podremos cumplimentar esta recomendación.

Iniciales

Estado Libre Asociado de Puerto Rico
OFICINA DEL CONTRALOR
San Juan, Puerto Rico

PLAN DE ACCIÓN CORRECTIVA
Oficina de Combustibles –Sistema Eléctrico Autoridad de Energía Eléctrica de Puerto Rico

RECOMENDACIÓN	ACCIÓN CORRECTIVA	RESULTADO
3. Las medidas de volumen sean tomadas por el químico del laboratorio contratado en lugar del Capitán de la barcaza u otro personal. Además, la medida debe ser realizada permitiendo que la plomada de la cinta métrica toque el fondo del tanque. *[Hallazgo 7-a.2) c) 1) y 2)]*	Esta actividad se realiza para determinar el combustible que se encuentra en la embarcación. La AEE paga por el combustible que se recibe en sus facilidades y no por el que llega en la embarcación, por lo cual no es necesario realizar esta actividad.	**Parcialmente Cumplimentada** En la Autoridad estamos en proceso evaluativo de las operaciones de los laboratorios internos para determinar las funciones operacionales y administrativas de los mismos. Este proceso de evaluación, preparación y aprobación del Plan de Acción de los laboratorios deberá completarse aproximadamente para marzo de 2003. Una vez completemos este proceso entraremos a la fase de las operaciones de los laboratorios. Cuando los laboratorios estén operando debidamente, podremos cumplimentar esta recomendación.
4. Se tomen las medidas necesarias para corregir las situaciones señaladas en el *Hallazgo 7-b.1) y 2); y c)1)y 2)* y asegurarse de que no se repitan.	No es necesario corregir estos señalamientos. Las situaciones aquí señaladas no constituyen una desviación de los procedimientos contenidos en el manual de operaciones del muelle, basado en la reglamentación federal (33CFR 154.710), y aceptado por la Guardia Costanera. La Guardia Costanera audita anualmente los procedimientos y equipos de la central y siempre han encontrado que cumplen con la reglamentación.	**Parcialmente Cumplimentada** En la Autoridad estamos en proceso evaluativo de las operaciones de los laboratorios internos para determinar las funciones operacionales y administrativas de los mismos. Este proceso de evaluación, preparación y aprobación del Plan de Acción de los laboratorios deberá completarse aproximadamente para marzo de 2003. Una vez completemos este proceso entraremos a la fase de las operaciones de los laboratorios. Cuando los laboratorios estén operando debidamente podremos cumplimentar esta recomendación.
13. Instruir al Tesorero de la AEE para que evalúe las situaciones señaladas en el *Hallazgo 8-a.3), 4) a) al d), 5) y 7)* y tome las medidas correctivas al respecto.	Los Directorados de Finanzas y Sistema Eléctrico han acordado el *Procedimiento de Recobro por Uso de Tanques de Combustible* para regular como se realizará la tramitación de los recobros por la utilización de los tanques arrendados para atender esta recomendación.	**Parcialmente Cumplimentada** El Administrador de la Oficina de Combustibles solicitó a la Oficina de Estudios y Procedimientos la revisión de los puntos 12 y 14 del Procedimiento de Recobro por Uso de Tanques de Combustible, según solicitado el 28 de octubre de 2002, por la Oficina del Contralor de Puerto Rico.

Iniciales

Estado Libre Asociado de Puerto Rico
OFICINA DEL CONTRALOR
San Juan, Puerto Rico

PLAN DE ACCIÓN CORRECTIVA
Oficina de Combustibles –Sistema Eléctrico Autoridad de Energía Eléctrica de Puerto Rico

RECOMENDACIÓN	ACCIÓN CORRECTIVA	RESULTADO
		Referente a las instrucciones impartidas al Tesorero de la Autoridad, el Director Ejecutivo impartió las mismas al Director de Finanzas. Las funciones de recibo de pagos las realizará el Departamento de Administración de Fondos e Inversiones de la División de Tesorería. Las funciones de envío de facturas, gestiones de cobro y ajuste de cuentas las realizará personal de la Oficina de Combustibles. **Anejo C**
14. Evaluar las situaciones señaladas en los *Hallazgos 8-a.6) y 9-a.1) y 2)* y tomar las medidas correctivas al respecto.	Para el hallazgo 8-a.6, los Directorados de Finanzas y Sistema Eléctrico utilizarán el Procedimiento de Recobro por Uso de Tanques de Combustibles para regular como se realizará la tramitación de los recobros por la utilización de los tanques arrendados para atender este señalamiento. Para los señalamientos 9-a.1) y 2), solicitamos a nuestra Oficina de Informática Corporativa evaluar qué medidas correctivas pueden implantarse.	**Parcialmente Cumplimentada** El Administrador de la Oficina de Combustibles solicitó a la Oficina de Estudios y Procedimientos la revisión de los puntos 12 y 14 del Procedimiento de Recobro por Uso de Tanques de Combustible, según solicitado el 28 de octubre de 2002, por la Oficina del Contralor de Puerto Rico. Referente a las instrucciones impartidas al Tesorero de la Autoridad, el Director Ejecutivo impartió las mismas al Director de Finanzas. Las funciones de recibo de pagos las realizará el Departamento de Administración de Fondos e Inversiones de la División de Tesorería. Las funciones de envío de facturas, gestiones de cobro y ajuste de cuentas las realizará personal de la Oficina de Combustibles. **Anejo C** La Oficina de Informática Corporativa está evaluando el sistema de información que utiliza la Oficina de Combustibles.

Iniciales

ANEJO A

AUTORIDAD DE ENERGÍA ELÉCTRICA
OFICINA DE AUDITORÍA INTERNA

Minuta de la prueba realizada de los contratos expedidos y el Registro de Contrato de la Oficina de Combustibles de la Autoridad de Energía Eléctrica (Autoridad). Recomendaciones 5 c y d del Informe de Auditoría de la Oficina del Contralor de Puerto Rico CP-02-26.

I. Propósito

En esta minuta describimos el examen realizado de los contratos expedidos durante el 2002, de los suplidores de combustibles y el Registro de Contratos preparado por la Oficina de Combustibles. Realizamos las pruebas para verificar si la Oficina de Combustibles cumple con las Recomendación 5 c del Informe del Contralor CP-02-26. En la misma nos indican: *Los contratos se formalicen antes de que se comiencen a recibir los bienes y servicios [Hallazgos 2-a.2)a)] y que no se repitan situaciones como las comentadas en los hallazgos 2-a.2)b) y c)2) y 4-a.1)..*

II. Resultados

En el Hallazgo 2-a.2 del informe de la Oficina del Contralor de Puerto Rico (Oficina del Contralor) describen que los contratos formalizados por la Autoridad el 30 de septiembre y 14 de octubre de 1999, los firmaron 218 y 379 días luego de la adjudicación de las subastas. Durante los periodos en que no medió contrato escrito entre las partes, la Autoridad compró, de las compañías combustible por $232,081,470. Verificamos los contratos firmados durante el 2002. Encontramos que realizaron las compras después de la firma del contrato. Incluimos copia del Registro de Contratos preparado por la Oficina de Combustibles.

En el hallazgo 2-a.2)b) nos indican que la Oficina de Combustibles no mantenía un registro actualizado de los contratos formalizados por la AEE para la compra de combustibles. En el hallazgo 2-a.2)c)2) nos indican que la División de

Suministros de la AEE mantiene un Registro de Suplidores Calificados en el cual se anotan las personas naturales y jurídicas acreditadas para proveerles bienes y servicios. Para ello, se crea un expediente por cada proveedor donde se incluyen los documentos que requiere la AEE para acreditarlos. Referente al primer hallazgo en discusión la Oficina de Auditoría Interna verificó el Registro de Contratos mecanizado preparado por la Oficina de Combustibles. El mismo incluye los números de contratos, suplidor, fecha de comienzo y términos, localidad del servicio, producto y el costo estimado. Éste incluye información relacionada con los contratos otorgados, vigentes y cancelados. Referente al Registro de Proveedores Calificados, verificamos los expedientes de la División de Suministros y encontramos que los mismos tienen todos los documentos requeridos. Relacionado con el Registro Único de Suplidores de la Administración de Servicios Generales la Autoridad está requiriendo la certificación emitida por estos. Incluimos copia de la Lista de Compañías de Combustibles Registradas en la Autoridad de Energía Eléctrica al 21 de enero de 2003.

Lista de Compañías de Combustible Registradas en la Autoridad de Energía Eléctrica de Puerto Rico
21 de enero de 2003

Nombre del Proveedor	Fecha Ingreso	Dirección	Persona Contacto	Fax
Veba Oil Supply & Trading, Inc.	17-NOV-2001	200 Schulz Drive Red Bank, NJ 07701-6745	Frank Copple	732.842.5844
Shell Chemical Yabucoa Refining , Inc.	7-MAY-2002	PO Box 366697 San Juan, PR 00936-6697	Merle Pastrana	787.729.1755
ESSO Standard Oil Company (PR)	15-JUN-1998	PO Box 364269 San Juan, PR 00936-4269	Rhonda M. Castillo	787.749.8835
Fuel & Marine Marketting/ Chevron Texaco	14-AGO-2002	3336 Richmond Ave., Suite 410 Houston Texas 77098	Carlos Grimaldo	713-752-3209
Venro Petroleum Corporation	7-AGO-2001	45 Rockefeller Plaza (630 Fifth Avenue) Suite 1600, New York, NY 10111	Frank Hurtado	212.969.1722
Caribbean Petroleum Corp.	10-JUL-2000	PO Box 364049 San Juan, PR 00936-4049	Norberto Sepulveda	787.787.1245
TCM Energy Corporation	24-FEB-2000	PMB43, 400 KALAF San Juan, PR 00918	César Figueroa	787.729.0880
Vitol S.A., Inc.	19-MAY-2000	1100 Louisiana, Suite 5500 Houston, TX 77002-5255	Antonio Marraoui	713.230.1111
Gasolinas de Puerto Rico	8-MAY-2000	PO Box 362916 San Juan, PR 00936-2916	Juan A. Rivera	787.783.0407
Liquilux	7-JUN-2000	PO Box 2547 Bayamón, PR 00960	Luciano Zambrana	787.785.6083
Trafigura AG	26-JUN-2002	One Stamford Plaza, 263 Presser Boulevard 16 th Floor, Stamford, CT 06901	Doug Long	203.355.7215
Puerto Rico Sun Oil Company	15-JUN-2002	PO Box 186 Yabucoa, PR 00767	Tim Bloomfield	787.253.2190
BP Products	14-AGO-2002	254 Muñoz Rivera Ave, Suite 900 Hato Rey PR 00918	John Atton	630.836.6567
AVE Inc.	31-JUL-2002	PO Box 474 Trujillo Alto, PR 00977-0474	José Mercado Jr.	787.764.5151
Phillips Petroleum Company	14-AGO-2002	1500 N Priest Dr. Tempe, Arizona 85281	Albert Alpha	203.422.0602
Petrobras América, Inc.	14-AGO-2002	361 San Francisco St. San Juan PR 00901	Ricardo Peixoto	713-781-9798
Lukoil Pan Americas LLC	15-MAY-2002	73 Broad ST., Suite D Red Bank, New Jersey 07701	Tom Brown	732.945.2800
Repsol YPF Tradin y Transporte SA (V)	10-SEPT-2004	Paseo de la Castellana 278 Madrid, España 28046		(34) 91-348-8000
The Shell Company (PR) LTD (V)	24-JUN-2003	PO Box 366697 San Juan, PR 00936-6697	Luis A. Morales	787.319.7072

Lista de Compañías de Combustible Registradas en la Autoridad de Energía Eléctrica de Puerto Rico
21 de enero de 2003

Texaco de Puerto Rico Inc	01-MAR-2000	PO Box 71315 San Juan, PR 00902-8415	Frank Rexach	787.749.5543

Preparado por:

Ramón O. Caldas Pagán
Administrador ,
Registro de Proveedores

Aprobado por:

Luis F. Jiménez Pagán
Jefe, División de Suministros
01-22-03

AUTORIDAD DE ENERGIA ELECTRICA DE PUERTO RICO

OFICINA DE COMBUSTIBLES

Lista de Contratos

Número de Contrato	*Suplidor*	*Comienzo*	*Término*	*Localidad*	*Producto*	*Costo Estimado*	*Volumen en BBL*
902-17-02	FAMM	07-Dec-02	06-Dec-03	AGUIRRE	NO6	$172,800,000.00	0
902-19-02	VITOL	13-Nov-02	12-Nov-03	AGUIRRE	NO2	$61,200,000.00	
902-25-02	LUKOIL	07-Jan-03	06-Jan-04	SJ/PS	NO6	$250,000,000.00	0
902-34-02	PETROBRAS	10-Jan-03	09-Jan-04	COSTA SUR	NO6	$300,000,000.00	0
OC-01152	CLARENDON	01-Oct-90	30-Sep-92	COSTA SUR	NO6	$0.00	
OC-01282	CORPOVEN	01-Feb-91	31-Jan-93	SJ/PS	NO6	$78,000,000.00	
OC-01562	VITOL	01-Aug-92	31-Jul-94	AG/CC	NO2	$124,275.00	
OC-01601	STINNES	01-Oct-92	30-Sep-93	COSTA SUR	NO6	$117,600,000.00	
OC-01615	CHAMPION	01-Nov-92	31-Oct-01	ALL STEAM PLANTS	LUB	$0.00	0
OC-01659	DELPHI	15-May-93	15-Aug-95	SJ/PS	NO6	$145,252,800.00	
OC-01675	DELPHI	10-Mar-93	15-Mar-93	SJ/PS	NO6	$3,652,325.00	250,000
OC-01693	VITOL	13-Apr-93	13-May-93	SJ/PS	NO6	$2,722,122.00	189,000
OC-01703	CAPECO	25-Jun-93	25-Jul-93	SJ/PS	NO6	$2,528,244.00	180,000
OC-01707	DELPHI	30-Jul-93	31-Jan-94	AGUIRRE	NO6	$0.00	0
OC-01731	PETROLEA	23-Dec-93	23-Jan-94	SJ/PS	NO6	$0.00	200,000
OC-01742	VITOL	23-Feb-94	23-Mar-94	AGUIRRE	NO6	$0.00	1,500,000
OC-01743	VITOL	01-Jun-94	31-May-96	AGUIRRE	NO6	$78,370,200.00	
OC-01746	DELPHI	24-Mar-94	24-Apr-94	AGUIRRE	NO6	$0.00	1,500,000
OC-01747	VITOL	01-Sep-94	31-Aug-95	MY, AG, CS	NO2	$118,250,000.00	
OC-01748	PR SUN OIL	01-Oct-94	30-Sep-96	GAS TURBINES	NO2	$16,125,000.00	

Lista de Contratos

Número de Contrato	Suplidor	Comienzo	Término	Localidad	Producto	Costo Estimado	Volumen en BBL
OC-01764	PR SUN OIL	01-Jul-94	30-Sep-94	GAS STATIONS	NO2	$2,500,000.00	2,500,000
OC-01771	CAPECO	04-Nov-94	03-Nov-96	PALO SECO	NO2	$18,628,460.00	
OC-01779	GPR	01-Apr-94	31-Mar-98	TCA-ALL STATIONS	GASOLINE	$0.00	0
OC-01807	STINNES	01-Jun-98	31-May-97	AGUIRRE	NO6	$96,000,000.00	
OC-01810	PR SUN OIL	20-Oct-95	19-Oct-97	SJ/PS	NO6	$151,200,000.00	
OC-01811	PR SUN OIL	01-Aug-95	30-Sep-95	SJ/PS	NO6	$26,000,000.00	1,500,000
OC-01814	STINNES	01-Oct-95	30-Sep-96	COSTA SUR	NO6	$172,800.00	
OC-01847-DLA	DON LUIS AUTO	01-Jun-96	31-May-98	TCA-ALL STATIONS	LUB	$0.00	0
OC-01847-HEMIS	HEMISPHERE	01-Jun-96	01-Jun-97	TCA-ALL STATIONS	LUB	$0.00	0
OC-01847-TEXAC	TEXACO PR	01-Jun-96	01-May-98	TCA-ALL STATIONS	LUB	$0.00	0
OC-01863	GALAXY	01-Oct-96	30-Sep-98	AG/CS/MAY	NO2	$125,000,000.00	5,000,000
OC-01878	STINNES	01-Oct-96	30-Sep-98	COSTA SUR	NO6	$161,500,000.00	
OC-01880	HESS	01-Jan-97	30-Dec-97	CAMBALACHE	NO2	$12,500,000.00	500,000
OC-01881	PR SUN OIL	01-Nov-96	31-Oct-98	GAS STATIONS	NO2	$16,450,000.00	
OC-01882	CAPECO	04-Nov-96	03-Nov-98	PALO SECO	NO2	$16,450,000.00	
OC-01923	CAPECO	24-Dec-96	24-Jan-97	AGUIRRE	NO2	$3,653,427.00	100,000
OC-01930	TRAFIGURA	20-Aug-97	19-Aug-98	AGUIRRE	NO6	$126,000,000.00	
OC-01938	TRAFIGURA	10-Mar-97	10-Apr-97	SJ/PS	NO6	$0.00	100,000
OC-01943	TEXACO	03-Apr-97	04-Apr-97	COSTA SUR	NO6		250,000
OC-01947	BETZD	30-Sep-96	31-Dec-99	ALL STEAM PLANTS	ADD	$4,500,000.00	
OC-01956	TEXACO	22-May-97	22-Aug-97	AGUIRRE	NO6	$0.00	1,000,000
OC-01957	CORCO	01-Feb-98	31-Jan-08	CORCO	STRG	$70,000,000.00	
OC-01960	VITOL	01-Dec-97	30-Nov-99	CAMBALACHE	NO2	$40,500,000.00	

Lista de Contratos

Número de Contrato	Suplidor	Comienzo	Término	Localidad	Producto	Costo Estimado	Volumen en BBL
OC-01963	VEBA	20-Oct-97	19-Oct-99	SJ/PS	NO6	$176,400,000.00	
OC-01980	TEXACO	12-Aug-97	12-Dec-97	SJ/PS	NO6	$0.00	250,000
OC-01981	STINNES	13-Aug-97	13-Sep-97	AGUIRRE	NO6	$0.00	420,000
OC-01984	CAPECO	01-Nov-97	31-Oct-99	GAS STATIONS	NO2	$20,000,000.00	
OC-01998	LUQUILUX	01-Mar-98	28-Feb-01	ALL STEAM PLANTS	PROP	$500,000.00	0
OC-02008	VEBA	10-Nov-97	10-Dec-97	AGUIRRE	NO6	$0.00	400,000
OC-02009	TRAFIGURA	04-Nov-97	04-Dec-97	COSTA SUR	NO6	$0.00	200,000
OC-02012	PR SUN OIL	26-Nov-97	26-Dec-97	JB,DG,YB	NO2	$0.00	30,000
OC-02042	GPR	01-Nov-98	31-Oct-02	TCA-AGUADILLA	GASOLINE	$540,000.00	0
OC-02052	VEBA	30-Sep-99	30-Sep-00	COSTA SUR	NO6	$170,000,000.00	10,000,000
OC-02068	MAXON	13-May-98	13-May-99	AGUIRRE	ADD	$4,800,000.00	
OC-02071	TRAFIGURA	18-May-98	18-Jul-98	COSTA SUR	NO6	$7,800,000.00	600,000
OC-02072	TEXACO	07-Jul-99	30-Sep-00	AG, CS, MY, CC	NO2	$105,000,000.00	5,000,000
OC-02075	VEBA	30-Sep-99	30-Sep-00	AGUIRRE	NO6	$126,000,000.00	7,000,000
OC-02106	ENRON	27-Sep-99	31-Oct-99	SJ/PS	NO6	$144,000,000.00	8,000,000
OC-02188	CAPECO	14-Oct-99	13-Oct-01	PALO SECO/HG	NO2	$15,750,000.00	750,000,000
OC-02221	PR SUN OIL	28-Oct-98	28-Nov-98	JB,DG,YB	NO2	$515,500.00	25,000
OC-02271	TEXACO	28-Jan-99	28-Feb-99	JB/DG/YB	NO2	$2,187,000.00	100,000
OC-02282	CAPECO	10-Feb-99	10-Apr-99	PALO SECO	NO2	$4,475,000.00	200,000
OC-02291	CAPECO	15-Dec-99	14-Dec-02	GAS STATIONS	GASOLINE	$2,525,000.00	0
OC-02322-CAPEC	CAPECO	22-Aug-00	21-Aug-02	TCA-ALL STATIONS	LUB	$77,500.00	0
OC-02322-CHAMP	CHAMPION	19-May-00	18-May-02	TCA-ALL STATIONS	LUB	$37,275.00	0
OC-02322-ESSO	ESSO	06-Jun-00	05-Jun-02	TCA-ALL STATIONS	LUB	$142,000.00	0

Lista de Contratos

Número de Contrato	Suplidor	Comienzo	Término	Localidad	Producto	Costo Estimado	Volumen en BBL
OC-02322-MADEL	MADELVA	12-May-00	11-May-02	TCA-ALL STATIONS	LUB	$240,000.00	0
OC-02322-SHELL	SHELL	14-Dec-00	13-Dec-02	TCA-ALL STATIONS	LUB	$20,000.00	0
OC-02322-TEXAC	TEXACO PR	17-May-00	16-May-02	TCA-ALL STATIONS	LUB	$5,200.00	0
OC-02366-CAPEC	CAPECO	24-Jan-00	23-Jan-02	JOBOS	NO2	$5,000,000.00	140,000
OC-02366-ESSO	ESSO	21-Dec-99	20-Dec-01	VB, YB, DG	NO2	$20,000,000.00	390,000
OC-02395	TRAFIGURA	22-Nov-99	21-Nov-01	SJ/PS	NO6	$180,000,000.00	10,000,000
OC-02396	TEXACO	26-Apr-00	25-Apr-02	CAMBALACHE	NO2	$54,000,000.00	2,000,000
OC-02397	CATCOR	04-Aug-99	01-Sep-99	CAMBALACHE	NO2	$3,229,560.00	101,000
OC-02405	FAMM	11-Jul-99	11-Sep-99	COSTA SUR	NO6	$3,865,000.00	270,000
OC-02565	VITOL	22-Oct-00	21-Oct-02	COSTA SUR	NO6	$235,000,000.00	10,000,000
OC-02584	VITOL	18-Oct-00	17-Oct-02	AG, CS, MY	NO2	$175,000,000.00	5,000,000
OC-02624	VITOL	11-Oct-00	10-Oct-02	AGUIRRE	NO6	$91,980,000.00	3,285,000
OC-02625	FAMM	20-Oct-00	19-Oct-02	AGUIRRE	NO6	$112,000,000.00	4,000,000
OC-02633	VEBA	01-Dec-00	30-Nov-02	SJ/PS	NO6	$240,000,000.00	10,000,000
OC-02674	TEXACO	09-Apr-01	08-Apr-02	GAS STATIONS	NO2	$33,600,000.00	0
OC-02684	LUQUILUX	05-Apr-02	04-Apr-03	ALL STEAM PLANTS	PROP	$800,000.00	24,000
OC-02786	GLENCORE	01-Jun-01	01-Aug-01	COSTA SUR	NO6	$1,307,250.00	600,000
OC-02835	CHAMPION	25-Jun-02	24-Jun-04	TCA-AGUADILLA	LUB	$8,000,000.00	0
OC-02841	TRAFIGURA	01-Sep-01	30-Sep-01	COSTA SUR	NO6	$5,605,548.00	281,000
OC-02954	SHELL CHEM	25-May-02	24-May-03	PALO SECO	NO2	$19,300,000.00	750,000
OC-02955	VITOL	17-Jun-02	16-Jun-03	CAMBALACHE	NO2	$48,000,000.00	0
OC-02956-ESSO	ESSO	18-Jul-02	07-Jul-03	MAYAGUEZ	NO2	$2,500,000.00	100,000
OC-02956-SHELL	SHELL CHEM	25-May-02	24-May-03	GAS STATIONS	NO2	$10,000,000.00	400,000

Lista de Contratos

Número de Contrato	Suplidor	Comienzo	Término	Localidad	Producto	Costo Estimado	Volumen en BBL
OC-02957	Best Salt	01-Jan-03	01-Jan-04			$0.00	0
OC-04050	BETZD	01-Jan-02	01-Jan-03	PALO SECO	ADD	$456,000.00	0
OC-04051	MAXON	01-Jan-02	01-Jan-03	COSTA SUR	ADD	$906,750.00	0

ANEJO B

Designation: D 4057 – 95 (Reapproved 2000)

An American National Standard

IMPMS (Chapter 8.1)

Standard Practice for Manual Sampling of Petroleum and Petroleum Products[1]

This standard is issued under the fixed designation D 4057; the number immediately following the designation indicates the year of original adoption or, in the case of revision, the year of last revision. A number in parentheses indicates the year of last reapproval. A superscript epsilon (ϵ) indicates an editorial change since the last revision or reapproval.

This test method has been approved by the sponsoring committees and accepted by the Cooperating Societies in accordance with established procedures. This method was issued as a joint ASTM-API standard in 1981.

This standard has been approved for use by agencies of the Department of Defense.

1. Scope

1.1 This practice covers procedures for manually obtaining representative samples of petroleum products of a liquid, semi-liquid, or solid state whose vapor pressure at ambient conditions is below 101 kPa (14.7 psia). If sampling is for the precise determination of volatility, use Practice D 5842 in conjunction with this practice. For sample mixing and handling of samples, refer to Practice D 5854. The practice does not cover sampling of electrical insulating oils and hydraulic fluids. A summary of the manual sampling procedures and their applications is presented in Table 1.

NOTE 1—The procedures described in this method may also be applicable in sampling most noncorrosive liquid industrial chemicals, provided that all safety precautions specific to these chemicals are strictly followed.

NOTE 2—The procedure for sampling liquified petroleum gases is described in Practice D 1265; the procedure for sampling fluid power hydraulic fluids is covered in ANSI B93.19 and B93.44; the procedure for sampling insulating oils is described in Practice D 923; and the procedure for sampling natural gas is described in Test Method D 1145.

NOTE 3—The procedure for special fuel samples for trace metal analysis is described in an appendix to Specification D 2880.

2. Referenced Documents

2.1 *ASTM Standards:*

D 86 Test Method for Distillation of Petroleum Products at Atmospheric Pressure[2]

D 217 Test Methods for Cone Penetration of Lubricating Grease[2]

D 244 Test Methods for Emulsified Asphalts[3]

D 268 Guide for Sampling and Testing Volatile Solvents and Chemical Intermediates for Use in Paint and Related Coatings and Materials[4]

D 323 Test Method for Vapor Pressure of Petroleum Products (Reid Method)[2]

D 346 Practice for Collection and Preparation of Coke Samples for Laboratory Analysis[5]

D 525 Test Method for Oxidation Stability of Gasoline (Induction Period Method)[2]

D 873 Test Method for Oxidation Stability of Aviation Fuels (Potential Residue Method)[2]

D 923 Test Method for Sampling Electrical Insulating Liquids[6]

D 977 Specification for Emulsified Asphalt[3]

D 1145 Test Method for Sampling Natural Gas[7]

D 1265 Practice for Sampling Liquefied Petroleum (LP) Gases—Manual Method[2]

D 1856 Test Method for Recovery of Asphalt from Solution by Abson Method[3]

D 2172 Test Methods for Quantitative Extraction of Bitumen from Bituminous Paving Mixtures[3]

D 2880 Specification for Gas Turbine Fuel Oils[8]

D 4177 Practice for Automatic Sampling of Petroleum and Petroleum Products[8]

D 4306 Practice for Aviation Fuel Sample Containers for Tests Affected by Trace Contamination[8]

D 5842 Practice for Mixing and Handling of Liquids of Petroleum and Petroleum Products[9]

D 5854 Practice for Mixing and Handling of Fuels for Volatility Measurements[9]

2.2 *American National Standards:*[10]

B93.19 Standard Method for Extraction Fluid Samples from the Lines of an Operating Hydraulic Fluid Power System

[1] This practice is under the jurisdiction of ASTM Committee D02 on Petroleum Products and Lubricantsand is the direct responsibility of Subcommittee D02.02 on Static Petroleum Measurement (Joint ASTM-API).

Current edition approved Nov. 10, 1995. Published January 1996. Originally published as D 4057 – 81. Last previous edition D 4057 – 88.

[2] *Annual Book of ASTM Standards*, Vol 05.01.

[3] *Annual Book of ASTM Standards*, Vol 04.03.

[4] *Annual Book of ASTM Standards*, Vol 06.04.

[5] *Annual Book of ASTM Standards*, Vol 05.06.

[6] *Annual Book of ASTM Standards*, Vol 10.03.

[7] Discontinued; see 1987 *Annual Book of ASTM Standards*, Vol 05.05.

[8] *Annual Book of ASTM Standards*, Vol 05.02.

[9] *Annual Book of ASTM Standards*, Vol 05.03.

[10] Available from American National Standards Institute, 11 W. 42nd St., 13th Floor, New York, NY 10036.

Copyright © ASTM, 100 Barr Harbor Drive, West Conshohocken, PA 19428-2959, United States.

TABLE 1 Typical Sampling Procedures and Applicability

Application	Type of Container	Procedure
Liquids of more than (13.8 kPa) and not more than 101 kPa (14.7 psia) RVP	storage tanks, ship and barge tanks, tank cars, tank trucks	bottle sampling
Liquids of 101 kPa (14.7 psia) RVP or less	storage tanks with taps	thief sampling
Bottom sampling of liquids of 13.8 kPa (2 psia) RVP or less	storage tanks with taps	tap sampling
Liquids of 101 kPa (14.7 psia) RVP or less	pipes or lines	tap sampling
Liquids of 13.8 kPa (2 psia) RVP or less	storage tanks, ships, barges	pipeline sampling
Liquids of 13.8 kPa (2 psia) RVP or less	free or open-discharge streams	bottle sampling
Liquids of 13.8 kPa (2 psia) RVP or less	drums, barrels, cans	dipper sampling
Bottom or thief sampling of liquids of 13.8 kPa (2 psia) RVP or less	tank cars, storage tanks	tube sampling
Liquids and semi-liquids of 13.8 kPa (2 psia) RVP or less	free or open-discharge streams; open tanks or kettles with open heads; tank cars, tank trucks, drums	thief sampling
Crude petroleum	storage tanks, ship and barge, tanks, tank cars, tank trucks, pipelines	dipper sampling
		automatic sampling
Industrial aromatic hydrocarbons		thief sampling
Waxes, solids bitumens, other soft solids	storage tanks, ship and barge tanks	bottle sampling
Petroleum coke; lumpy solids	barrels, cases, bags, cakes	tap sampling
Greases, soft waxes, asphalts	freight cars, conveyors, bags, barrels, boxes	bottle sampling
Asphaltic materials	kettles, drums, cans, tubes	boring sampling
Emulsified asphalts	storage tanks, tank cars, lines, packages	grab sampling
	storage tanks, tank cars, lines, packages	grease sampling
		...
		...

(for Particulate Contamination Analysis)

B93.44 Method for Extracting Fluid Samples from the Reservoir of an Operating Hydraulic Fluid Power System

2.3 *API Manual of Petroleum Measurement Standards:*[11]

Chapter 8.2 Automatic Sampling of Petroleum and Petroleum Products

Chapter 8.3 Standard Practice for Mixing and Handling of Liquid Samples of Petroleum and Petroleum Products

Chapter 8.4 Standard Practice for the Sampling and Handling of Fuels for Volatility Measurements

Chapter 9.3 Thermohydrometer Test Method for Density and API Gravity of Crude Petroleum and Liquid Petroleum Products

Chapter 17.1 Guidelines for Marine Cargo Inspection

Chapter 17.2 Measurement of Cargoes Aboard Marine Tank Vessels

Chapter 18.1 Measurement Procedures for Crude Oil Gathered from Small Tanks By Truck

Chapter 10, various sections, Sediment and Water Determination

3. Terminology

3.1 *Definitions of Terms Specific to This Standard:*

3.1.1 *Samples*:

3.1.1.1 *all-levels sample*—a sample obtained by submerging a stoppered beaker or bottle to a point as near as possible to the draw-off level, then opening the sampler and raising it at a rate such that it is approximately three-fourths full as it emerges from the liquid.

3.1.1.2 *boring sample*— a sample of the material contained in a barrel, case, bag, or cake that is obtained from the chips created by boring holes into the material with a ship auger.

3.1.1.3 *bottom sample*— a spot sample collected from the material at the bottom of the tank, container, or line at its lowest point.

(a) Discussion—In practice, the term bottom sample has a variety of meanings. As a result, it is recommended that the exact sampling location (for example, 15 cm from the bottom) should be specified when using this term.

3.1.1.4 *bottom water sample*—a spot sample of free water taken from beneath the petroleum contained in a ship or barge compartment or a storage tank.

3.1.1.5 *clearance sample*— a spot sample taken with the inlet opening of the sampling apparatus 10 cm (4 in.) (some regulatory agencies require 15 cm (6 in.)) below the bottom of the tank outlet.

(a) Discussion—This term is normally associated with small (159 m^3 or 1000 Bbls or less) tanks, commonly referred to as lease tanks.

3.1.1.6 *composite sample*— a blend of spot samples mixed in proportion to the volumes of material from which the spot samples were obtained.

3.1.1.7 *core sample*— a sample of uniform cross sectional area taken at a given height in a tank.

3.1.1.8 *dipper sample*— a sample obtained by placing a dipper or other collecting vessel in the path of a free-flowing stream to collect a definite volume from the full cross section of the stream at regular time intervals for a constant time rate of flow or at time intervals varied in proportion to the flow rate.

3.1.1.9 *drain sample*— a sample obtained from the water draw-off valve on a storage tank.

(a) Discussion—Occasionally, a drain sample may be the same as a bottom sample (for example, in the case of a tank car).

3.1.1.10 *floating roof sample*—a spot sample taken just below the surface to determine the density of the liquid on which the roof is floating.

3.1.1.11 *flow proportional sample*—a sample taken from a

[11] Available from American Petroleum Institute, 1220 L St., NW, Washington, DC 20005.

pipe such that the rate of sampling is proportional throughout the sampling period to the flow rate of the fluid in the pipe.

3.1.1.12 *grab sample*— a sample obtained by collecting equal quantities from parts or packages of a shipment of loose solids such that the sample is representative of the entire shipment.

3.1.1.13 *grease sample*— a sample obtained by scooping or dipping a quantity of soft or semi-liquid material contained from a package in a representative manner.

3.1.1.14 *lower sample*— a spot sample of liquid from the middle of the lower one-third of the tank's content (a distance of five-sixths of the depth liquid below the liquid's surface). See Fig. 1.

3.1.1.15 *middle sample*— a spot sample taken from the middle tank's contents (a distance of one-half of the depth of liquid below the liquid's surface). See Fig. 1.

3.1.1.16 *multiple tank composite sample*—a mixture of individual samples or composites of samples that have been obtained from several tanks or ship/barge compartments containing the same grade of material.

(a) Discussion—The mixture is blended in proportion to the volume of material contained in the respective tanks or compartments.

3.1.1.17 *outlet sample*— a spot sample taken with the inlet opening of the sampling apparatus at the level of the bottom of the tank outlet (fixed or floating). See Fig. 1.

3.1.1.18 *representative sample*—a portion extracted from the total volume that contains the constituents in the same proportions that are present in that total volume.

3.1.1.19 *running sample*— a sample obtained by lowering a breaker or bottle to the level of the bottom of the outlet connection or swing line and returning it to the top of the oil at a uniform rate such that the beaker or bottle is about three-fourths full when withdrawn from the oil.

3.1.1.20 *sample*—a portion extracted from a total volume that may or may not contain the constituents in the same proportions that are present in that total volume.

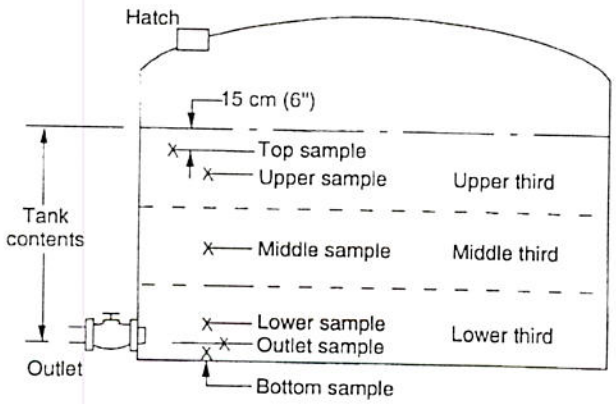

NOTE 1—The location shown for the outlet sample applies only to tanks with side outlets. It does not apply when the outlet comes from the floor of the tank or turns down into a sump. Bottom sample location must be specified.

NOTE 2—Samples should be obtained from within solid stand pipes as the materials normally not representative of the material in the tank at that point.

FIG. 1 Spot Sampling Locations

3.1.1.21 *sampling*—all the steps required to obtain a sample that is representative of the contents of any pipe, tank, or other vessel and to place that sample in a container from which a representative test specimen can be taken for analysis.

3.1.1.22 *spot sample*— a sample taken at a specific location in a tank or from a flowing stream in a pipe at a specific time.

3.1.1.23 *surface sample*— a spot sample skimmed from the surface of a liquid in a tank.

3.1.1.24 *tank composite sample*—a blend created from the upper, middle, and lower samples from a single tank.

(a) Discussion—For a tank of uniform cross section, such as an upright cylindrical tank, the blend consists of equal parts of the three samples. For a horizontal cylindrical tank, the blend consists of three samples in the proportions shown in Table 2.

3.1.1.25 *tap sample*—a spot sample taken from a sample tap on the side of a tank. It may also be referred to as a tank-side sample.

3.1.1.26 *top sample*—a spot sample obtained 15 cm (6 in.) below the top surface of the liquid. See Fig. 1.

3.1.1.27 *tube or thief sample*—a sample obtained with a sampling tube or special thief, either as a core sample or spot sample from a specific point in the tank or container.

3.1.1.28 *upper sample*— a spot sample taken from the middle of the upper one-third of the tank's contents (a distance of one-sixth of the liquid depth below the liquid's surface). See Fig. 1.

3.1.2 *Other Terms*:

3.1.2.1 *automatic sampler*—a device used to extract a representative sample from the liquid flowing in a pipe.

(a) Discussion—The automatic sampler generally consists of a probe, a sample extractor, an associated controller, a flow measuring device, and a sample receiver. For additional information on an automatic sampler, see Practice D 4177.

3.1.2.2 *dissolved water*— water in solution in an oil.

3.1.2.3 *emulsion*—an oil/water mixture that does not readily separate.

3.1.2.4 *entrained water*— water suspended in the oil.

(a) Discussion—Entrained water includes emulsions but does not include dissolved water.

3.1.2.5 *free water*—the water that exists as a separate phase.

3.1.2.6 *intermediate container*—the vessel into which all or part of the sample from a primary container/receiver is transferred for transport, storage, or ease of handling.

3.1.2.7 *primary sample receiver/receptacle*—a container in which a sample is initially collected.

TABLE 2 Sampling Instructions for Horizontal Cylindrical Tanks

Liquid Depth (% of Diameter)	Sampling Level (% of Diameter Above Bottom)			Composite Sample (Proportionate Parts Of)		
	Upper	Middle	Lower	Upper	Middle	Lower
100	80	50	20	3	4	3
90	75	50	20	3	4	3
80	70	50	20	2	5	3
70		50	20		6	4
60		50	20		5	5
50		40	20		4	6
40			20			10
30			15			10
20			10			10
10			5			10

(a) Discussion—Examples of primary sampler containers include glass and plastic bottles, cans, core-type thief, and fixed and portable sample receivers.

3.1.2.8 *stand pipes*— vertical sections of pipe or tubing extending from the gaging platform to near the bottom of tanks that are equipped with external or internal floating roofs.

(a) Discussion—Stand pipes may also be found on ships and barges.

3.1.2.9 *test specimen*— the representative sample taken from the primary or intermediate sample container for analysis.

4. Summary of Practice

4.1 This practice provides procedures for manually obtaining samples of petroleum and petroleum products of a liquid, semi-liquid or solid state from tanks, pipelines, drums, barrels, cans, tubes, bags, kettles and open-discharge streams. It addresses, in detail, the various factors which need to be considered in obtaining a representative sample. These considerations include the analytical tests to be conducted on the sample, the types of sample containers to be used and any special instructions required for special materials to be sampled. Test Method D 5854 can provide additional guidance.

5. Significance and Use

5.1 Representative samples of petroleum and petroleum products are required for the determination of chemical and physical properties, which are used to establish standard volumes, prices, and compliance with commercial and regulatory specifications.

5.2 The following concepts must be considered when selecting a specific sampling procedure.

5.2.1 *Objective of Manual Sampling*:

5.2.1.1 The objective of manual sampling is to obtain a small portion (spot sample) of material from a selected area within a container that is representative of the material in the area or, in the case of running or all-level samples, a sample whose composition is representative of the total material in the container. A series of spot samples may be combined to create a representative sample.

5.2.2 *Required Conditions for the Application of Manual Sampling*:

5.2.2.1 Manual sampling may be applied under all conditions within the scope of this practice, provided that the proper sampling procedures are followed.

5.2.2.2 In many liquid manual sampling applications, the material to be sampled contains a heavy component (such as free water) which tends to separate from the main component. In these cases, manual sampling is appropriate under the following conditions.

(*a*) Sufficient time must have elapsed for the heavy component to adequately separate and settle.

(*b*) It must be possible to measure the level of the settled component in order to stay well above that level when drawing representative samples, unless all or part of the heavy component will be included in the portion of the tank contents to be identified.

(*c*) When one or more of these conditions cannot be met, sampling is recommended and is accomplished by means of an automatic sampling system (see Practice D 4177).

6. Apparatus

6.1 Sample containers come in a variety of shapes, sizes, and materials. To be able to select the right container for a given application one must have knowledge of the material to be sampled to ensure that there will be no interaction between the sampled material and the container which would affect the integrity of the other. Additional considerations in the selection of sample containers is the type of mixing required to remix the contents before transferring the sample from the container and the type of laboratory analyses that are to be conducted on the sample. To facilitate the discussion on proper handling and mixing of samples, sample containers are referred to as either primary or intermediate containers. Regardless of the type of sample container used, the sample container should be large enough to contain the required sample volume without exceeding 80 % of the container capacity. The additional capacity is required for thermal expansion of the sample and enhances sample mixing.

6.2 *General Container Design Considerations*—Following are general design considerations for sample containers:

6.2.1 The bottom of the container should be sloped continuously downward to the outlet to ensure complete liquid withdrawal.

6.2.2 There should be no internal pockets or dead spots.

6.2.3 Internal surfaces should be designed to minimize corrosion, encrustation, and water/sediment clingage.

6.2.4 There should be an inspection cover/closure of sufficient size to facilitate filling, inspection, and cleaning.

6.2.5 The container should be designed to allow the preparation of a homogeneous mixture of the sample while preventing the loss of any constituents which affect the representativeness of the sample and the accuracy of the analytical tests.

6.2.6 The container should be designed to allow the transfer of samples from the container to the analytical apparatus while maintaining their representative nature.

6.3 *Bottles (Glass)*—Clear glass bottles may be examined visually for cleanliness and allows visual inspection of the sample for free water cloudiness, and solid impurities. Brown glass bottles afford some protection to the samples when light may affect the test results.

6.4 *Bottles (Plastic)*—Plastic bottles made of suitable material may be used for the handling and storage of gas oil, diesel oil, fuel oil, and lubricating oil. Bottles of this type should not be used for gasoline, aviation jet fuel, kerosine, crude oil, white spirit, medicinal white oil, and special boiling point products unless testing indicates there is no problem with solubility, contamination, or loss of light components.

6.4.1 In no circumstances shall nonlinear (conventional) polyethylene containers be used to store samples of liquid hydrocarbons. This is to avoid sample contamination or sample bottle failure. Used engine oil samples that may have been subjected to fuel dilution should not be stored in plastic containers.

6.4.2 Plastic bottles have an advantage in that they will not shatter like glass or corrode like metal containers.

6.5 *Cans*—When cans are to be used, they must have seams that have been soldered on the exterior surfaces with a flux of rosin in a suitable solvent. Such a flux is easily removed with

gasoline, whereas many others are very difficult to remove. Minute traces of flux may contaminate the sample so that results obtained on tests such as dielectric strength, oxidation resistance, and sludge formation may be erroneous. Internal epoxy lined cans may have residual contamination and precautions should be taken to ensure its removal. Practice D 4306 should be used when taking samples for aviation fuels.

6.6 *Container Closures*—Cork stoppers, or screw caps of plastic or metal may be used for glass bottles. Corks must be of good quality, clean, and free from holes and loose bits of cork. Never use rubber stoppers. Prevent the sample from contacting the cork by wrapping tin or aluminum foil around the cork before forcing it into the bottle. Screw caps providing a vapor tight closure seal shall be used for cans. Screw caps must be protected by a disk faced with material that will not deteriorate and contaminate the sample. Containers used to take samples that will be tested for density or gravity shall have screw caps.

6.7 *Cleaning Procedure*—Sample containers must be clean and free from all substances which might contaminate the material being sampled (such as water, dirt, lint, washing compounds, naphtha and other solvents, soldering fluxes, acids, rust, and oil). Prior to further use, reusable containers such as cans and bottles should be rinsed with a suitable solvent. Use of sludge solvents to remove all traces of sediments and sludge may be necessary. Following the solvent wash, the container should be washed with a strong soap solution, rinsed thoroughly with tap water, and given a final rinse using distilled water. Dry the container either by passing a current of clean warm air through the container or by placing it in a hot dust-free cabinet at 40°C (104°F) or higher. When dry, stopper or cap the container immediately. Normally, it is not necessary to wash new containers.

6.7.1 Depending on service, receivers used in conjunction with automatic samplers may need to be washed with solvent between uses. In most applications, it is not desirable or practical to wash these receivers using soap and water as outlined above for cans and bottles. The cleanliness and integrity of all sample containers/receivers must be verified prior to use.

6.7.2 When sampling aviation fuel, Practice D 4306 should be consulted for recommended cleaning procedures for containers that are to be used in tests for the determination of water separation, copper corrosion, electrical conductivity, thermal stability, lubricity, and trace metal content.

6.8 *Sample Mixing Systems*—The sample container should be compatible with the mixing system for remixing samples that have stratified to ensure that a representative sample is available for transfer to an intermediate container or the analytical apparatus. This is especially critical when remixing crude, some black products, and condensates for sediment and water analysis to ensure a representative sample. The requirements governing the amount of mixing and type of mixing apparatus differ depending upon the petroleum or petroleum product and the analytical test to be performed. Refer to Practice D 5854 for more detailed information.

6.8.1 When stratification is not a major concern, adequate mixing may be obtained by such methods as shaking (manual or mechanical), or use of a shear mixer.

6.8.2 Manual and mechanical shaking of the sample container are not recommended methods for mixing a sample for sediment and water (S&W) analysis. Tests have shown it is difficult to impart sufficient mixing energy to mix and maintain a homogeneous representative sample. Practice D 5854 contains more detailed information.

6.9 *Other Equipment*—A graduated cylinder or other measuring device of suitable capacity is often required for determining sample quantity in many of the sampling procedures and for compositing samples.

6.10 *Sampling Devices*—Sampling devices are described in detail under each of the specific sampling procedures. Sampling devices shall be clean, dry, and free of all substances that might contaminate the material being sampled.

7. Manual Sampling Considerations

7.1 The following factors must be considered in the development and application of manual sampling procedures:

7.1.1 *Physical and Chemical Property Tests*—The physical and chemical property tests to be performed on a sample will dictate the sampling procedures, the sample quantity required, and many of the sample handling requirements.

7.1.2 *Sampling Sequence*:

7.1.2.1 Any disturbance of the material in a tank that is to be sampled may adversely affect the representative character of the sample(s). Therefore, the sampling operation should be conducted before innage gaging, the associated temperature determination, and any other similar activity that could disturb the tank contents.

7.1.2.2 To avoid contamination of the oil column during the sampling operation, the order of precedence for sampling should start from the top and work downward, according to the following sampling sequence: surface, top, upper, middle, lower, outlet, clearance, all-levels, bottom, and running sample.

7.1.3 *Equipment Cleanliness*—The sampling equipment should be clean prior to commencing the sampling operation. Any residual material left in a sampling device or sample container from a previous sample or cleaning operation may destroy the representative character of the sample. It is good practice with light petroleum products to rinse the container with the product to be sampled prior to drawing samples.

7.1.4 *Compositing of Individual Samples*:

7.1.4.1 If the sampling procedure requires that several different samples be obtained, physical property tests may be performed on each sample or on a composite of the various samples. When the respective tests are performed on individual samples, which is the recommended procedure, the test results are averaged generally.

7.1.4.2 When a multiple tank composite sample is required, such as on board ships and barges, a composite tank sample may be prepared from the samples from different tanks when they contain the same material. In order for such a composite tank sample to be representative of the material contained in the various tanks, the quantity from the individual samples used to prepare the composite tank sample must be proportional to the volumes in the corresponding tanks. In most other compositing situations, equal volumes from the individual samples must be used. The method of compositing should be

documented and care taken to preserve the integrity of the samples. It is recommended that a portion of each tank sample be retained separately (not composited) for retesting if necessary.

7.1.4.3 When compositing samples, exercise care to ensure sample integrity. Refer to Practice D 5854 for guidance on mixing and handling of samples.

7.1.4.4 Samples taken at specific levels, for example, upper-middle-lower capping will require a small portion of the sample to be poured out to create an ullage in the container before capping. All other samples shall be capped immediately and taken to the laboratory.

7.1.5 *Sample Transfers*—The number of intermediate transfers from one container to another between the actual sampling operation and testing should be minimized. The loss of light hydrocarbons as the result of splashing, loss of water due to clingage, or contamination from external sources, or both, may distort test results, for example, density, sediment and water, product clarity. The more transfers between containers, the greater the likelihood one or both of these problems may occur. See Practice D 5854 for additional information concerning the handling and mixing of samples.

7.1.6 *Sample Storage*—Except when being transferred, samples should be maintained in a closed container in order to prevent loss of light components. Samples should be protected during storage to prevent weathering or degradation from light, heat, or other potential detrimental conditions.

7.1.7 *Sample Handling*—If a sample is not uniform (homogeneous) and a portion of the sample must be transferred to another container or test vessel, the sample must be thoroughly mixed in accordance with the type of material and appropriate test method, in order to ensure the portion transferred is representative. Exercise care to ensure mixing does not alter the components within the sample, for example, loss of light ends. See Practice D 5854 for more detailed instructions.

8. Special Precautions

8.1 This practice does not purport to cover all safety aspects associated with sampling. However, it is presumed that the personnel performing sampling operations are adequately trained with regard to the safe application of the procedures contained herein for the specific sampling situation.

8.2 A degree of caution is required during all sampling operations, but in particular when sampling certain products. Crude oil may contain varying amounts of hydrogen sulfide (sour crude), an extremely toxic gas. Annex A1 provides precautionary statements that are applicable to the sampling and handling of many of these materials.

8.3 When taking samples from tanks suspected of containing flammable atmospheres, precautions should be taken to guard against ignitions from static electricity. Conductive objects, such as gage tapes, sample containers, and thermometers, should not be lowered into or suspended in a compartment or tank that is being filled, or immediately after cessation of pumping. Conductive material such as gage tape should always be in contact with gage tube until immersed in the fluid. A waiting period (normally 30 min or more after filling cessation) will generally be required to permit dissipation of the electrostatic charge. In order to reduce the potential for static charge, nylon or polyester rope, cords, or clothing should not be used.

9. Special Instructions for Specific Materials

9.1 *Crude Petroleum and Residual Fuel Oils*:

9.1.1 Crude petroleum and residual fuel oils usually are nonhomogeneous. Tank samples of crude oil and residual oils may not be representative for the following reasons:

9.1.1.1 The concentration of entrained water is higher near the bottom. The running sample or the composite of the upper, middle, and lower sample may not represent the concentration of entrained water.

9.1.1.2 The interface between oil and free water is difficult to measure, especially in the presence of emulsion layers, or sludge.

9.1.1.3 The determination of the volume of free water is difficult because the free water level may vary across the tank bottom surface. The bottom is often covered by pools of free water or water emulsion impounded by layers of sludge or wax.

9.1.2 Automatic sampling in accordance with Practice D 4177 is recommended whenever samples of these materials are required for custody transfer measurements. However, tank samples may be used when agreed to by all parties to the transaction.

9.2 *Gasoline and Distillate Products*— Gasoline and distillate products are usually homogeneous, but they are often shipped from tanks that have clearly separated water on the bottom. Tank sampling, in accordance with the procedures outlined in Section 13, is acceptable under the conditions covered in 5.2.2.

9.3 *Industrial Aromatic Hydrocarbons*— For samples of industrial aromatic hydrocarbons (benzene, toluene, xylene, and solvent naphthas), proceed in accordance with Sections 5.2.1, 6, and 10, and Sections 12.2-13, with particular emphasis on the procedures pertaining to the precautions for care and cleanliness. See Annex A1 for details.

9.4 *Lacquer Solvents and Diluents*:

9.4.1 When sampling bulk shipments of lacquer solvents and diluents which are to be tested using Guide D 268, observe the precautions and instructions described in 9.4.2 and 9.4.3.

9.4.2 *Tanks and Tank Cars*—Obtain upper and lower samples (see Fig. 1) of not more than 1 L (qt) each by the thief or bottle spot sampling procedures outlined in 13.4. In the laboratory, prepare a composite sample of not less than 2 L/2 qts by mixing equal parts of the upper and lower samples.

9.4.3 *Barrels, Drums, and Cans*—Obtain samples from the number of containers per shipment as mutually agreed. In the case of expensive solvents, which are purchased in small quantities, it is recommended that each container be sampled. Withdraw a portion from the center of each container to be sampled using the tube sampling procedure (see 9.4.3) or bottle sampling procedure (see 13.4.2, although a smaller bottle may be used). Prepare a composite sample of at least 1 L (1 qt) by mixing equal portions of not less than 500 mL (1 pt) from each container sampled.

9.5 *Asphaltic Materials*—When sampling asphaltic materials that are to be tested using Test Method D 1856 or Test Method D 2172, obtain samples by the boring procedure in

Section 17 or the grab procedure in Section 18. A sample of sufficient size to yield at least 100 g (¼ lb) of recovered bitumen is required. About 1000 g (2 lb) of sheet asphalt mixtures usually will be sufficient. If the largest lumps in the sample are 2.5 cm (1 in.), 2000 g (4 lb) will usually be required, and still larger samples if the mixture contains larger aggregates.

9.6 *Emulsified Asphalts*—It is frequently necessary to test samples in accordance with the requirements of Specification D 977, and Test Methods D 244. Obtain samples from tanks, tank cars, and tank trucks by the bottle sampling procedure outlined in 13.4.2 using a bottle that has a 4-cm (1½-in.) diameter or larger mouth. Refer to Fig. 1 and Table 2 for sampling locations. Use the dipper procedure in Section 15 to obtain samples for fill or discharge lines. Sample packages in accordance with Table 3. If the material is solid or semisolid, use the boring sampling procedure described in Section 17. Obtain at least 4 L (1 gal) or 4.5 Kg (10 lbs) from each lot or shipment. Store the samples in clean, airtight containers at a temperature of not less than 4°C (40°F) until the test. Use a glass or black iron container for emulsified asphalts of the RS-1 type.

10. Special Instructions for Specific Tests

10.1 *General*—Special sampling precautions and instructions are required for some ASTM test methods and specifications. Such instructions supplement the general procedures of this practice and supersede them if there is a conflict.

10.2 *Distillation of Petroleum Products*— When obtaining samples of natural gasoline that are to be tested using Test Method D 86, the bottle sampling procedure described in 13.4.2 is the preferred technique, with the exception that pre-cooled bottles and laboratory compositing is required. Before obtaining the sample, pre-cool the bottle by immersing it in the product, allowing it to fill, and discard the first filling. If the bottle procedure cannot be used, obtain the sample by the tap procedure and with the use of the cooling bath, as described in 13.6. Do not agitate the bottle while drawing the sample. After obtaining the sample, close the bottle immediately with a tight-fitting stopper, and store it in an ice bath or refrigerator at a temperature of 0 to 4.5°C (32 to 40°F).

10.3 *Vapor Pressure*—When sampling petroleum and petroleum products that are to be tested for vapor pressure, refer to Practice D 5842.

10.4 *Oxidation Stability*:

10.4.1 When sampling products that are to be tested for oxidation stability in accordance with Test Method D 525, Test Method D 873, or equivalent methods, observe the precautions and instructions that follow.

10.4.2 *Precautions*—Very small amounts (as low as 0.001 %) of some materials, such as inhibitors, have a considerable effect upon oxidation stability tests. Avoid contamination and exposure to light while taking and handling samples. To prevent undue agitation with air, which promotes oxidation, do not pour, shake, or stir samples to any greater extent than necessary. Never expose them to temperatures above those necessitated by atmospheric conditions.

10.4.3 *Sample Containers*—Use only brown glass or wrapped clear glass bottles as containers, since it is difficult to make certain that cans are free of contaminants, such as rust and soldering flux. Clean the bottles by the procedure described in 6.7. Rinse thoroughly with distilled water, dry, and protect the bottles from dust and dirt.

10.4.4 *Sampling*—A running sample obtained by the procedure in 13.5 is recommended because the sample is taken directly in the bottle. This reduces the possibility of air absorption, loss of vapors, and contamination. Just before sampling, rinse the bottle with the product to be sampled.

TABLE 3 Minimum Number of Packages to be Selected for Sampling

Packages in Lot	Packages to be Sampled	Packages in Lot	Packages to be Sampled
1 to 3	all	1332 to 1728	12
4 to 64	4	1729 to 2197	13
65 to 125	5	2198 to 2744	14
126 to 216	6	2745 to 3375	15
217 to 343	7	3376 to 4096	16
344 to 512	8	4097 to 4913	17
513 to 729	9	4914 to 5832	18
730 to 1000	10	5833 to 6859	19
1001 to 1331	11	6850 and greater	20

11. Special Instructions for Specific Applications

11.1 *Marine Cargoes of Crude Oils*:

11.1.1 Samples of ship or barge cargoes of crude petroleum may be taken by mutual agreement by the following methods:

11.1.1.1 From the shore tanks before loading and both before and after discharging as in Section 13.

11.1.1.2 From the pipeline during discharging or loading. Pipeline samples may be taken either manually or with an automatic sampler. If the pipeline requires displacement or flushing, exercise care that the pipeline sample includes the entire cargo and none of the displacement. Separate samples may be required to cover the effect of the line displacement on the prior or following transfer.

11.1.1.3 From the ship's or barge's tanks after loading or before discharging. An all-levels sample, running sample, upper-middle-lower sample, or spot samples at agreed levels may be used for sampling each cargo compartment of a ship or barge.

11.1.2 Ship and barge samples may be taken either through open hatches or by use of equipment designed for closed systems.

11.1.3 Normally, when loading a marine vessel, the shore tank sample or the pipeline sample taken from the loading line is the custody transfer sample. However, ship's/barge's tank samples may also be tested for sediment and water (S&W) and for other quality aspects, when required. The results of these ship's/barge's tank sample tests, together with the shore tank sample tests, may be shown on the cargo certificate.

11.1.4 When discharging a ship/barge, the pipeline sample taken from a properly designed and operated automatic line sampler, in the discharge line, should be the custody transfer sample. Where no proper line sample is available, the ship's/barge's tank sample can be the custody transfer sample except where specifically exempted.

11.1.5 Samples of ship/barge cargoes of finished products are taken from both shipping and receiving tanks and from the pipeline, if required. In addition, the product in each of the

ship/barge tanks should be sampled after the vessel is loaded or just before unloading.

NOTE 4—Refer to MPMS Chapter 17 for additional requirements associated with sampling materials in marine vessels.

11.2 *Crude Oil Gathered By Truck*—Refer to MPMS Chapter 18.1 for additional sampling requirements when gathering crude oil by tank truck.

11.3 *Tank Cars*—Sample the material after the car has been loaded or just before unloading.

11.4 *Package Lots (Cans, Drums, Barrels, or Boxes)*—Take samples from a sufficient number of the individual packages to prepare a composite sample that will be representative of the entire lot or shipment. Select at random the individual packages to be sampled. The number of random packages will depend on several practical considerations, such as (*1*) the tightness of the product specifications; (*2*) the sources and type of the material and whether or not more than one production batch may be represented in the load and (*3*) previous experience with similar shipments, particularly with respect to the uniformity of quality from package to package. In most cases, the number specified in Table 4 will be satisfactory.

12. Sampling Procedures (General)

12.1 The standard sample procedures described in this practice are summarized in Table 1. Alternative sampling procedures may be used if a mutually satisfactory agreement has been reached by the parties involved. It is recommended that such agreements be put in writing and signed by authorized officials.

12.2 *Precautions*:

12.2.1 Extreme care and good judgment are necessary to ensure that samples are obtained that represent the general characteristics and average condition of the material. Clean hands are important.

12.2.2 Since many petroleum vapors are toxic and flammable, avoid breathing them, igniting them from an open flame, burning embers, or a spark produced by static electricity. All safety precautions specific to the material being sampled should be followed.

12.2.3 When sampling relatively volatile products more than 13.8 kPa (2 psia) RVP, the sampling apparatus shall be filled and allowed to drain before drawing the sample. If the sample is to be transferred to another container, this container shall also be rinsed with some of the volatile product and then drained. When the actual sample is emptied into this container, the sampling apparatus should be upended into the opening of the sample container and should remain in this position until the contents have been transferred so that no unsaturated air will be entrained in the transfer of the sample.

12.2.4 When sampling nonvolatile liquid products, 13.8 kPa (2 psia) RVP or less, sampling apparatus shall be filled and allowed to drain before drawing the actual sample. If the actual sample is to be transferred to another container, the sample container shall be rinsed with some of the product to be sampled and drained before it is filled with the actual sample.

12.2.5 The transfer of crude oil samples from the sample apparatus/receiver to the laboratory glassware in which they will be analyzed requires special care to maintain their representative nature. The number of transfers should be minimized. Mechanical means of mixing and transferring the samples in the sample receiver are recommended.

12.3 *Sample Handling*:

12.3.1 *Volatile Samples*—All volatile samples of petroleum and petroleum products shall be protected from evaporation. Transfer the product from the sampling apparatus to the sample container immediately. Keep the container closed except when the material is being transferred. After delivery to the laboratory, volatile samples should be cooled before the containers are opened.

12.3.2 *Light Sensitive Samples*—It is important that samples sensitive to light, such as gasoline, be kept in the dark, if the testing is to include the determination of such properties as color, octane, tetraethyl lead and inhibitor contents, sludge forming characteristics, stability tests, or neutralization value. Brown glass bottles may be used. Wrap or cover clear glass bottles immediately.

12.3.3 *Refined Materials*—Protect highly refined products from moisture and dust by placing paper, plastic, or metal foil over the stopper and the top of the container.

12.3.4 *Container Outage*—Never fill a sample container completely. Allow adequate room for expansion, taking into consideration the temperature of the liquid at the time of filling, and the probable maximum temperature to which the filled container may be subjected. Adequate sample mixing is difficult if the container is more than 80 % full.

12.4 *Sample Labeling*—Label the container immediately after a sample is obtained. Use waterproof and oil proof ink or a pencil hard enough to dent the tag. Soft pencil and ordinary ink markers are subject to obliteration from moisture, oil smearing, and handling. Include the following information on the label:

12.4.1 Date and time (the period elapsed during continuous sampling and the hour and minute of collection for dipper samples),

12.4.2 Name of the sampler,

12.4.3 Name and number and owner of the vessel, car, or container,

12.4.4 Grade of material, and

12.4.5 Reference symbol or identification number.

12.5 *Sample Shipment*—To prevent loss of liquid and vapors during shipment and to protect against moisture and dust, cover the stoppers of glass bottles with plastic caps that have

TABLE 4 Spot Sampling Requirements

NOTE 1—When samples are required at more than one location in the tank, the samples shall be obtained beginning with the upper sample first and progressing sequentially to the lower sample.

Tank Capacity/Liquid Level	Required Samples		
	Upper	Middle	Lower
Tank capacity less than or equal to 159 m^3(1 000 bbls)		X	
Tank capacity greater than 159 m^3 (1 000 bbls)	X	X	X
Level ≤ 3 m (10 ft)		X	
3 m (10 ft) < Level ≤ 4.5 m (15 ft)	X		X
Level > 4.5 m (15 ft)	X	X	X

been swelled in water, wiped dry, placed over the tops of the stoppered bottles, and allowed to shrink tightly in place. Before filling metal containers, inspect the lips and caps for dents, out-of-roundness, or other imperfections. Correct or discard the cap or container, or both. After filling, screw the cap tightly and check for leaks. Appropriate governmental and carrier regulations applying to the shipment of flammable liquids must be observed.

13. Tank Sampling

13.1 Samples should not be obtained from within solid stand pipes as the material is normally not representative of the material in the tank at that point. Stand pipe samples should only be taken from pipes with at least two rows of overlapping slots. See Fig. 2.

13.2 When sampling crude oil tanks with diameters in excess of 45 m (150 ft), additional samples should be taken from any other available gaging hatches located around the perimeter of the tank roof, safety requirements permitting. All the samples should be individually analyzed using the same test method and the results should then be averaged arithmetically.

13.3 *Composite Sample Preparation*—A composite spot sample is a blend of spot samples mixed volumetrically proportional for testing. Some tests may also be made on the spot samples before blending and the results averaged. Spot samples from crude oil tanks are collected in the following ways:

13.3.1 *Three-way*—On tanks larger than 159 m^3 (1000 bbls) capacity, which contain in excess of 4.5 m (15 ft) of oil, equal volume samples should be taken at the upper, middle, and lower or outlet connection of the merchantable oil, in the order named. This method may also be used on tanks up to and including a capacity of 159 m^3 (1000 bbls).

13.3.2 *Two-way*—On tanks smaller than 159 m^3 (1000 bbls) capacity, which contain in excess of 3 m (10 ft) and up to 4.5 m (15 ft) of oil, equal volume samples should be taken at the upper and lower, or outlet connection of the merchantable oil, in the order named. This method may also be used on tanks up to and including a capacity of 159 m^3 (1000 bbls).

13.4 *Spot Sampling Methods*—The requirements for spot sampling are shown in Table 4. For sampling locations, see Fig. 1.

13.4.1 *Core Thief Spot Sampling Procedure*:

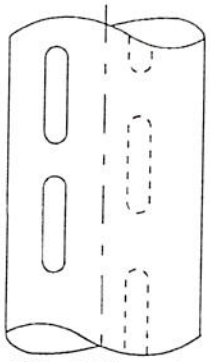

FIG. 2 Stand Pipe (with overlapping slots)

13.4.1.1 *Application*—The core thief spot sampling procedure may be used for sampling liquids of 101 kPa (14.7 psia) RVP or less in storage tanks, tank cars, tank trucks, ship, and barge tanks.

13.4.1.2 *Apparatus*—A typical core-type thief is shown in Fig. 3. The thief shall be designed so that a sample can be obtained within 2.0 to 2.5 cm (¾ to 1 in.) of the bottom or at any other specific location within the tank or vessel. The size of the core thief should be selected depending upon the volume of the sample required. The thief should be capable of penetrating the oil in the tank to the required level, mechanically equipped to permit filling at any desired level, and capable of being withdrawn without undue contamination of the contents. The thief may include the following features:

(*a*) Uniform cross section and bottom closure,

(*b*) Extension rods for use in obtaining samples at levels corresponding with requirements for high connections or for samples to determine high settled sediment and water levels,

(*c*) Sediment and water gage for determining the height of sediment and water in the thief,

(*d*) A clear cylinder that facilitates observing the gravity and temperature of the oil during a gravity test; it also should be equipped with a windshield,

(*e*) An opener to break the tension on the valve or slide at any desired level,

(*f*) A thief cord marked so that the sample can be taken at any depth in the vertical cross section of the tank,

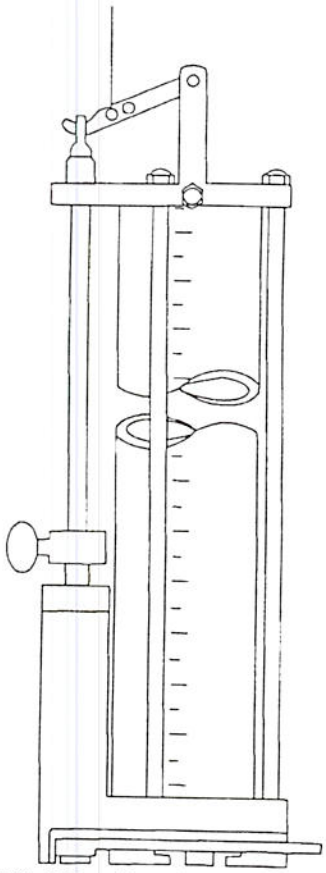

FIG. 3 Core-Type Sampling Thief

(*g*) A hook to hang the thief in the hatch vertically, and

(*h*) Sample cocks for obtaining samples for determination of sediment and water spaced at the 10-cm (4-in.) and 20-cm (8-in.) marker levels.

(*i*) A graduated cylinder and sample container may also be required for use with this procedure.

13.4.1.3 *Procedure*:

(*a*) Inspect the thief, graduated cylinder, and sample container for cleanliness and use only clean, dry equipment.

(*b*) Obtain an estimate of the liquid level in the tank. Use an automatic gage or obtain an outage measurement, if required.

(*c*) Check the thief for proper operation.

(*d*) Open the bottom closure, and set the trip hook in the trip rod.

(*e*) Lower the thief to the required location. See Table 5.

(*f*) At the required location, close the bottom closure on the thief with a sharp jerk of the line.

(*g*) Withdraw the thief.

(*h*) If only a middle sample is required, pour all of the sample into the sample container. If samples are required at more than one location, measure out a specified amount of sample with the graduated cylinder, and deposit it in the sample container.

NOTE 5—The amount of sample measured will depend upon the size of the thief and the tests to be performed but should be consistent for the samples taken at different levels.

(*i*) Discard the remainder of the sample from the sampling thief as required.

(*j*) Repeat steps (*d*) through (*i*) to obtain a sample(s) at the other sample location(s) required by Table 5 or to obtain additional sample volume, if only a middle sample is required.

(*k*) Install the lid on the sample container.

(*l*) Label the sample container.

(*m*) Return the sample container to the laboratory or other facility for mixing and testing.

13.4.2 *Bottle/Beaker Spot Sampling*:

13.4.2.1 *Application*—The bottle or beaker spot sampling procedure may be used for sampling liquids of 101 kPa (14.7 psia) RVP or less in storage tanks, tank cars, tank trucks, ship, and barge tanks. Solids or semi-liquids that can be liquified by heat may be sampled using this procedure, provided they are true liquids at the time of sampling.

13.4.2.2 *Apparatus*—The bottle and beaker are shown in Fig. 4. A graduated cylinder and possibly a sample container are required for use with this procedure. The sampling cage shall be made of a metal or plastic suitably constructed to hold the appropriate container. The combined apparatus shall be of such weight as to sink readily in the material to be sampled, and provision shall be made to fill the container at any desired level (see Fig. 4A). Bottles of special dimensions are required to fit a sampling cage. The use of sampling cage is generally preferred to that of a weighted sampling beaker for volatile products since loss of light ends is likely to occur when transferring the sample from a weighted sampling beaker to another container.

TABLE 5 Weighted Sampling Bottle or Beaker

Material	Diameter of Opening	
	cm	in.
Light lubricating oils, kerosines, gasolines, transparent gas oils, diesel fuels, distillates	2	¾
Heavy lubricating oils, nontransparent gas oils	4	1½
Light crude oils less than 43 cTs at 40°C	2	¾
Heavy crude and fuel oils	4	1½

13.4.2.3 *Procedure*:

(*a*) Inspect the sampling bottle or beaker, graduated cylinder, and sample container for cleanliness and use only clean, dry equipment.

(*b*) Obtain an estimate of the liquid level in the tank. Use an automatic gage or obtain an outage measurement if required.

(*c*) Attach the weighted line to the sample bottle/beaker or place the bottle in a sampling cage, as applicable.

(*d*) Insert the cork in the sampling bottle or beaker.

(*e*) Lower the sampling assembly to the required location. See Table 5.

(*f*) At the required location, pull out the stopper with a sharp jerk of the sampling line.

(*g*) Allow sufficient time for the bottle/beaker to completely fill at the specific location.

(*h*) Withdraw the sampling assembly.

(*i*) Verify the bottle/beaker is completely full. If not full, empty the bottle/beaker and repeat the procedure beginning with (*d*).

(*j*) If only this spot sample is required for compositing will be accomplished elsewhere, pour all of the sample into the sample container or discard one-fourth of the sample, stopper the bottle/beaker, and proceed to (*n*). If composited samples are required at more than one location, measure out a specific amount of sample with a graduated cylinder and deposit it in the sample container.

NOTE 6—The amount of sample measured will depend upon the size of the bottle/beaker and the tests to be performed but should be consistent for the samples taken at different levels.

(*k*) Discard the remainder of the sample from the sampling bottle/beaker as required.

(*l*) Repeat (*c*) through (*k*) to obtain a sample(s) at the other sample location(s) required by Table 5 or to obtain additional sample volume if only a middle sample is required.

(*m*) Install the closure on the sample container.

(*n*) Disconnect the line from the bottle, or remove the sample bottle from the sampling cage, as applicable.

(*o*) Label the sample container.

(*p*) Return the sample container to the laboratory or other facility for mixing and testing.

13.5 *Running or All-Level Sampling*:

13.5.1 *Application*—The running and all levels sample procedures are applicable for sampling liquids of 101 kPa (14.7 psia) RVP or less in tank cars, tank trucks, shore tanks, ship tanks, and barge tanks. Solids or semi-liquids that can be liquified by heat may be sampled by this procedure, provided they are true liquids at the time of sampling. A running/all-levels sample is not necessarily a representative sample because the tank volume may not be proportional to the depth and because the operator may not be able to raise the sampler at the rate required for proportional filling. The rate of filling is proportional to the square root of the depth of immersion.

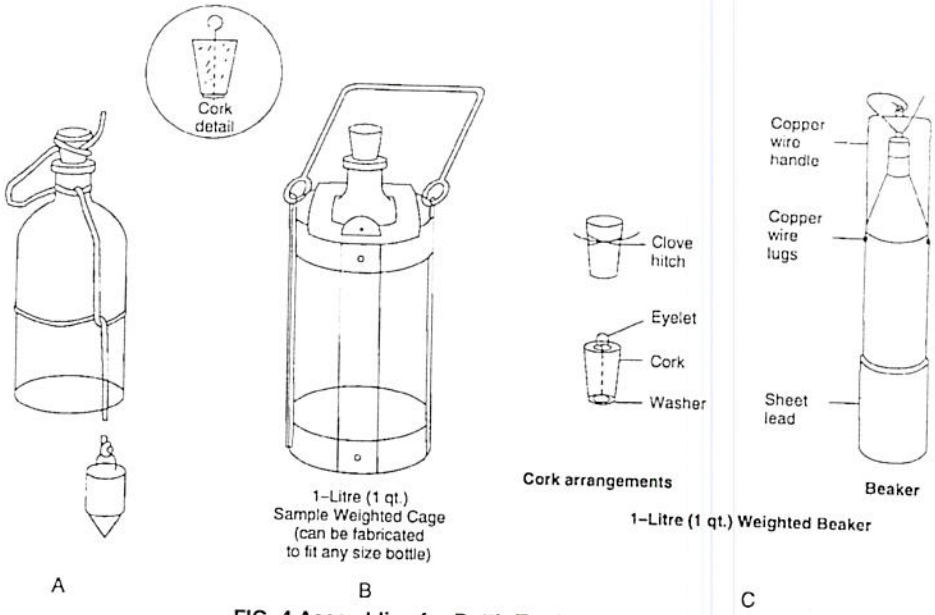

FIG. 4 Assemblies for Bottle/Beaker Sampling

13.5.2 *Apparatus*—A suitable sampling bottle or beaker, as shown in Fig. 4A and B, equipped with notched cork or other restricted opening is required. Recommended opening diameters for various applications are given in Table 5.

13.5.3 *Procedure*:

13.5.3.1 Inspect the sampling bottle and sample container for cleanliness and use only clean, dry equipment.

13.5.3.2 Attach the weighted line to the sample bottle, or place the bottle in a sampling cage.

13.5.3.3 If required to restrict the filling rate, insert a notched cork in the sampling bottle.

13.5.3.4 At a uniform rate, lower the bottle assembly as near as possible to the level of the bottom of the outlet connection or swing line inlet and, without hesitation, raise it such that the bottle is approximately three-fourths full when withdrawn from the liquid.

13.5.3.5 Verify that a proper quantity of sample has been obtained. If the bottle is more than three-fourths full, discard the sample and repeat 13.5.3 and 13.5.4, adjusting the rate at which the bottle assembly is lowered and raised. Alternatively, repeat 13.5.3 and 13.5.4 using a different notched cork.

13.5.3.6 Empty the contents of the bottle into the sample container, if necessary.

13.5.3.7 If additional sample volume is required, repeat 13.5.3.3-13.5.3.6.

13.5.3.8 Install the lid on the sample container.

13.5.3.9 Label the sample container.

13.5.3.10 Disconnect the line from the bottle, or remove the sample bottle from the sampling cage, as applicable.

13.5.3.11 Return the sample container to the laboratory or other facility for mixing and testing.

13.6 *Tap Sampling*:

13.6.1 *Application*—The tap sampling procedure is applicable for sampling liquids of 101 kPa (14.7 psia) RVP or less in tanks that are equipped with suitable sampling taps. This procedure is recommended for volatile stocks in tanks of the breather and balloon-roof type, spheroids, and so forth. (Samples may be taken from the drain cocks of gage glasses, if the tank is not equipped with sampling taps.)

13.6.2 *Apparatus*:

13.6.2.1 Typical sample tap assembly is shown in Fig. 5. Each tap should be a minimum of 1.25 cm (½ in.) in diameter. Taps 2.0 cm (¾-in.) may be required for heavy, viscous liquids (for example, crude oil of .9465 density (18° API) or less). On tanks that are not equipped with floating roofs, each sample tap should extend into the tank a minimum of 10 cm (4 in.). Normally, a sample tap should be equipped with a delivery tube which permits the filling of the sample container from the bottom.

13.6.2.2 For tanks having a side outlet, a tap for obtaining a clearance sample may be located 2 cm (4 in.) below the bottom of the outlet connection. Other requirements for sample taps are outlined in Table 6.

13.6.2.3 Clean, dry glass bottles of convenient size and strength to receive the samples are required.

13.6.3 *Procedure*:

13.6.3.1 Inspect the sample container(s) and graduated cylinder for cleanliness. If required, obtain clean equipment or clean the existing equipment with a suitable solvent, and rinse with the liquid to be sampled prior to proceeding to 13.6.3.2.

13.6.3.2 Obtain an estimate of the liquid level in the tank.

13.6.3.3 If the material to be sampled is 101 kPa (14.7 psia) RVP or less, connect the delivery tube directly to the sample tap as required.

13.6.3.4 Flush the sample tap and piping until they have been completely purged.

13.6.3.5 Collect the sample in a sample container or a graduated cylinder in accordance with the requirements set forth in Table 7. If samples are to be obtained from different taps, use a graduated cylinder to measure the appropriate sample quantity. Otherwise, collect the sample directly in the sample container. If a delivery tube is used, ensure the end of

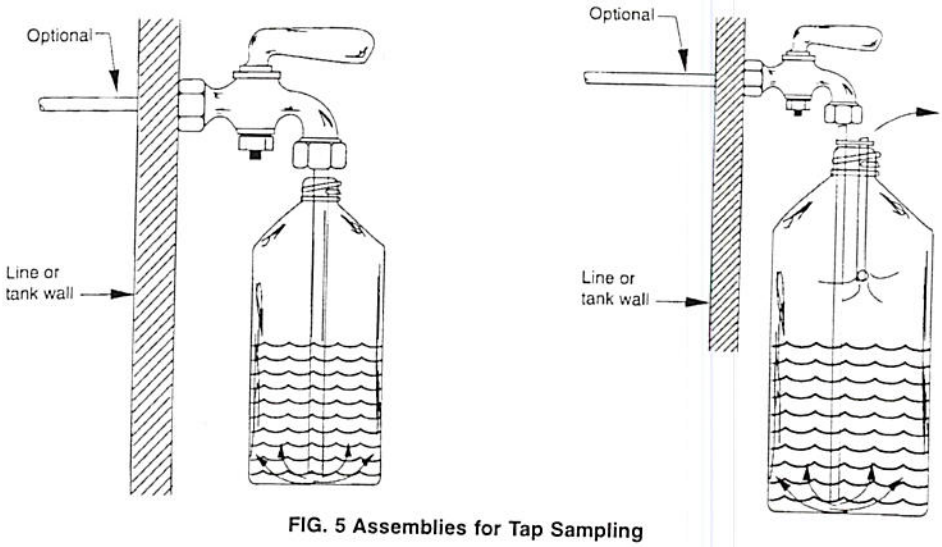

FIG. 5 Assemblies for Tap Sampling

TABLE 6 Sample Tap Specifications

Tank Capacity	1590 m³(10 000 bbls) Or Less	Greater Than 1590 m³(10 000 bbls)
Number of Sets	1	2[A]
Number of taps per set, min	3	5
Vertical location		
Upper tap	45 cm (18 in.) from top of shell	
Lower tap	even with bottom of outlet	
Middle tap(s)	equally spaced between upper and lower tap	
Circumferential location		
From inlet	2.4 m (8 ft), min	
From outlet/drain	1.6 m (6 ft), min	

[A]The respective sets of taps should be located on opposite sides of the tank.

TABLE 7 Tap Sampling Requirements

Tank Capacity/Liquid Level	Sampling Requirements
Tank capacity less than or equal to 1590 m³(10 000 bbls)	
Level below middle tap	Total sample from the lower tap.
Level above middle tap—closest to middle tap	Equal amounts from the middle and lower taps.
Level above middle tap—closest to upper tap	⅔ of total sample from the middle tap and ⅓ of total sample from the lower tap.
Level above upper tap	Equal amounts from the upper, middle, and lower taps.
Tank capacity greater than 1590 m³ (10 000 bbls)	Equal amounts from all submerged taps. A minimum of three taps are required representing different volumes.

the delivery tube is maintained below the liquid level in the graduated cylinder or sample container during the withdrawal of the sample.

13.6.3.6 If the sample was collected in a graduated cylinder, deposit the sample in the sample container.

13.6.3.7 Disconnect the delivery tube and cooler as applicable.

13.6.3.8 If required in accordance with Table 7, repeat 13.6.3-13.6.3.7 to obtain samples from additional taps.

13.6.3.9 Install the lid on the sample container.

13.6.3.10 Label the sample container.

13.6.3.11 Return the sample container to the laboratory or other facility for mixing and testing.

13.7 *Bottom Sampling*:

13.7.1 *Core Thief Bottom Sampling*:

13.7.1.1 *Application*—The core thief sampling procedure is applicable for obtaining bottom samples or for obtaining samples of semi-liquids in tank cars and storage tanks. The core thief is also widely used in sampling crude petroleum in storage tanks. In this application, it may be used for taking samples at different levels, as well as for bottom samples of nonmerchantable oil and water at the bottom of the tank. The thief can be used in some cases to obtain a quantitative estimate of the water at the bottom of a tank.

13.7.1.2 *Apparatus*—The thief shall be designed so that a sample can be obtained within 2 to 2.5 cm (¾ to 1 in.) of the bottom of the car or tank. The core type thief is shown in Fig. 3. This type is lowered into the tank with the valve open to permit the hydrocarbon to flush through the container. When the thief strikes the bottom of the tank, the valve shuts automatically to trap a bottom sample.

13.7.1.3 *Procedure*—Lower the clean, dry thief slowly through the dome of the tank car or tank hatch until it gently bumps the bottom. Allow the thief to fill and settle, gently raise 5 to 10 cm (2 to 4 in.) and then lower the thief until it strikes the bottom and the valve closes. Remove the thief from the tank and transfer the contents to the sample container. Close and label the container immediately and deliver it to the laboratory.

13.7.2 *Closed-Core Bottom Sampling*:

13.7.2.1 *Application*—The closed-core thief sampling procedure is applicable for obtaining bottom samples of tank cars and storage tanks. In sampling crude petroleum in storage tanks, the thief might be used for obtaining bottom samples of nonmerchantable oil and water at the bottom of the tank.

13.7.2.2 *Apparatus*—The thief shall be designed so that a sample can be obtained within 1.25 cm (½ in.) of the bottom of the tank car or tank. A closed-core type thief is shown in Fig. 6. This type of thief has a projecting stem on the valve rod which opens the valves automatically as the stem strikes the bottom of the tank. The sample enters the container through the bottom valve, and air is released simultaneously through the

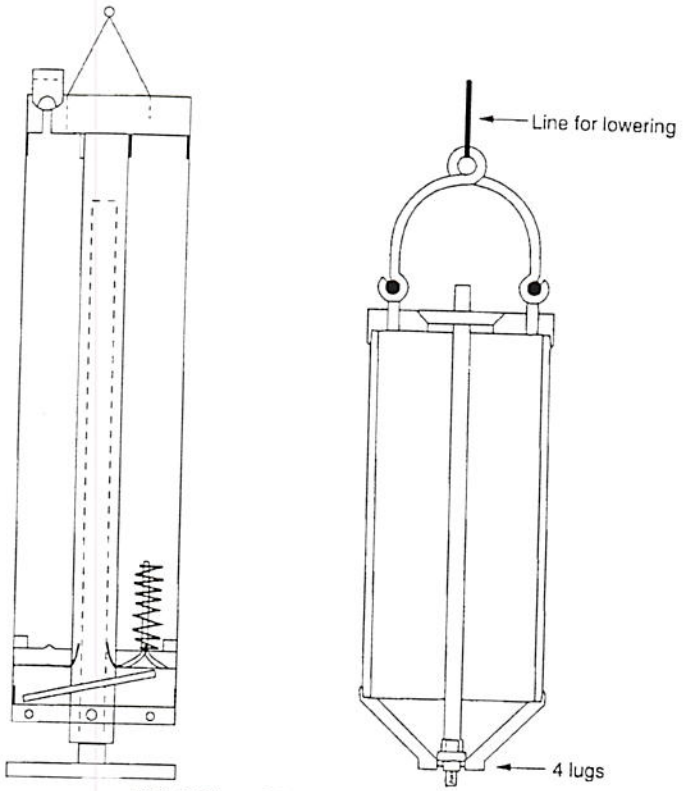

FIG. 6 Closed-Core Type Sampling Thief

top valve. The valves snap shut when the thief is withdrawn. Use only clean, dry cans, or glass bottles as sample containers.

13.7.2.3 *Procedure*—Lower the clean, dry thief through the dome of the tank car or tank hatch until it strikes the bottom. When full, remove the thief and transfer the contents to the sample container. Close and label the container immediately and deliver it to the laboratory.

13.7.3 *Extended-Tube Sampling*:

13.7.3.1 *Application*—The extended-tube sampling procedure may be used only for obtaining bottom water samples primarily on ships and barges. The procedure may be used for sampling bottom water in shore tanks, but no specific guidelines for such use are available.

13.7.3.2 *Apparatus*—A typical extended-tube sampling assembly is shown in Fig. 7. The extended-tube sampler consists of a flexible tube connected to the suction of a manually operated pump. For support purposes and to establish a known sampling point, the tubing is attached to the weighted end of a conductive wire or tape such that the open end of the tube is located approximately 1.25 cm (½ in.) above the tip of the weight. The tubing and wire (or tape) shall be long enough to extend to the bottom (reference height) of the vessel or storage tank from which the sample is to be obtained. A grounding cable shall be provided for the assembly. In addition to the sampler, a clean, dry bottle or other appropriate container is required to collect each sample.

13.7.3.3 *Procedure*:

(*a*) Assemble the extended-tube sampler.

(*b*) Following assembly, prime the tubing and pump with water and close-off (ensure it is not vented to atmosphere) the

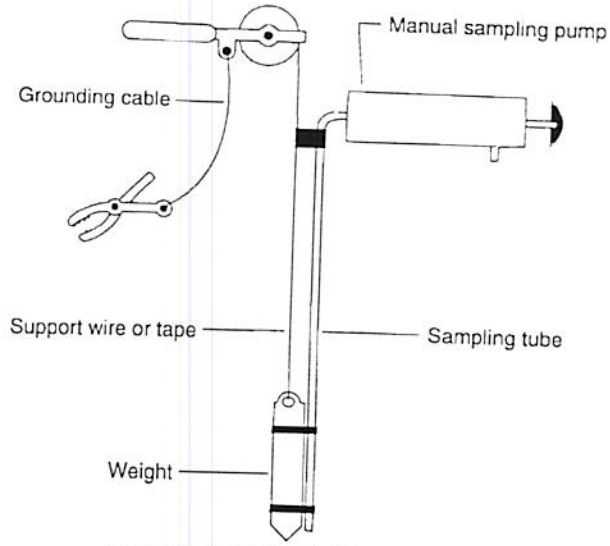

FIG. 7 Typical Extended-Tube Sampler

top end of the assembly to prevent loss of priming water as the sampling tube is lowered. Connect the grounding cable to the ship or barge tank or storage tank, and lower the weighted end of the sampler to the bottom.

(*c*) Begin the sampling operation by slowly and steadily operating the manual pump. To reduce the possibility of capturing a contaminated sample, initially purge and discard a volume greater than twice the sampling assembly's capacity. Collect the sample(s) directly in a clean, dry bottle(s) or other appropriate container(s).

(*d*) If a sample at a different level within the bottom water layer is required, raise the weighted bob and tubing to the new level above the bottom. Purge the residual water in the tubing assembly (twice the sampler assembly volume), and collect the new sample(s).

(*e*) After each sample has been collected, immediately close and label the bottle (or container) in preparation for delivery to the laboratory.

(*f*) When the sampling operation is complete, clean and disassemble the sampler components.

14. Manual Pipeline Sampling

14.1 *Application*—This manual pipeline sampling procedure is applicable to liquids of 101 kPa (14.7 psia) RVP or less and semi-liquids in pipelines, filling lines, and transfer lines. The continual sampling of pipeline streams by automatic devices is covered in Practice D 4177. When custody transfer is involved, continuous automatic sampling is the preferred method as opposed to manual pipeline samples. In the event of automatic sampler failure, manual sampling may be needed. Such manual samples should be taken as representatively as possible.

14.2 *Apparatus*—A sampling probe is used to direct sample from the flowing stream. All probes should extend into the center one-third of the pipe's cross-section area. All probes inlets should be facing upstream. Probe designs that are commonly used are shown in Fig. 8 and can be:

14.2.1 A tube beveled at a 45° angle as shown in Fig. 8A.

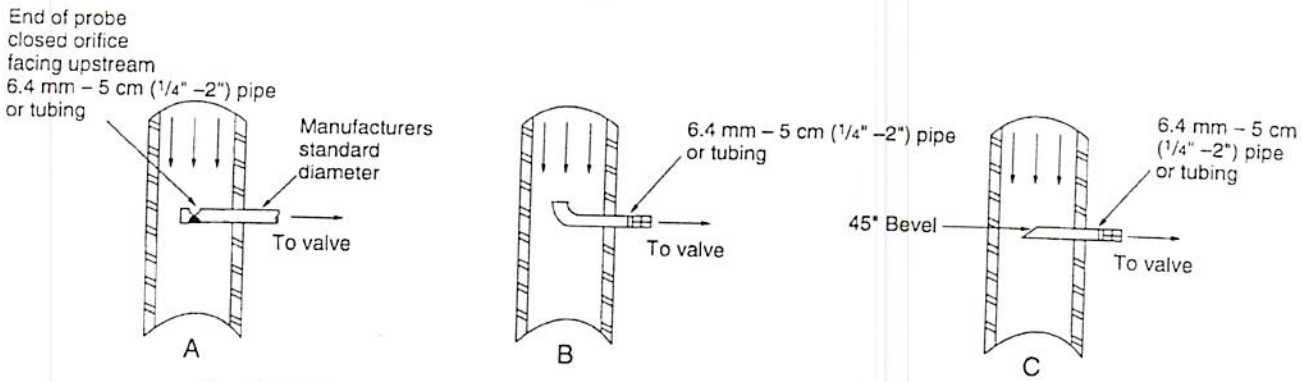

NOTE 1—Probes may be fitted with valves or plug cocks. The probe should be oriented horizontally.

FIG. 8 Probes for Spot Manual Samples

14.2.2 A short radius elbow or pipe bend. The end of the probe should be chamfered on the inside diameter to give a sharp entrance edge (see Fig. 8B).

14.2.3 A closed-end tube with a round orifice spaced near the closed end as shown in Fig. 8C.

14.3 *Probe Location*:

14.3.1 Since the fluid to be sampled may not always be homogeneous, the location, position, and size of the sampling probe should be such as to minimize any separation of water and heavier particles that would make their concentration different in the gathered sample than in the main stream.

14.3.2 The probe should always be in a horizontal plane to prevent drain back of any part of the sample to the main stream.

14.3.3 The sampling probe should preferably be located in a vertical run of pipe where such a vertical run can be provided. The probe may also be located in a horizontal run of pipe. The flowing velocity must be high enough to provide adequate turbulent mixing (see Practice D 4177).

14.3.4 Where adequate flowing velocity is not available, a suitable device for mixing the fluid flow should be installed upstream of the sampling tap to reduce stratification to an acceptable level. If flow has been vertical for a sufficient distance, as in a platform riser, such a device may not be necessary even at low flow rates. Some effective methods for obtaining adequate mixing are: a reduction in pipe size, a series of baffles, and orifice or perforated plate, or combination of any of these methods. The design or sizing of the device is optional with the user, as long as the flowing stream is sufficiently well mixed to provide a representative sample from the probe.

14.3.5 Sampling lines, used in conjunction with probes, should be as short as is practical and should be cleared before any samples are taken.

14.3.6 When sampling semi-liquids, it may be necessary to heat the sample line, valves, and receiver to a temperature just sufficient to keep the material liquid and to ensure accurate sampling and mixing.

14.3.7 To control the rate at which the sample is withdrawn, the probe should be fitted with valves or plug cocks.

14.4 *Procedure*:

14.4.1 Adjust the valve or plug cock from the sampling probe so that a steady stream is drawn from the probe. Whenever possible, the rate of sample withdrawal should be such that the velocity of liquid flowing through the probe is approximately equal to the average linear velocity of the stream flowing through the pipeline. Measure and record the rate of sample withdrawal as gallons per hour. Divert the sample stream to the sampling container continuously or intermittently to provide a quantity of sample that will be of sufficient size for analysis.

14.4.2 In sampling crude petroleum and other petroleum products, samples of 250 mL (½pt) or more should be taken every hour or at increments less than an hour, as necessary. By mutual agreement, the sample period or sample size, or both, may be varied to accommodate the parcel size. It is important that the size of the samples and the intervals between the sampling operations be uniform for a uniform flow rate. When the main stream flow rate is variable, the sampling rate and volume must be varied accordingly so that the flow is proportional. In practice, this is difficult to accomplish manually.

14.4.3 Each sample of crude petroleum should be placed in a closed container, and at the end of the agreed upon time period, the combined samples should be mixed and a composite sample taken for test purposes. Refer to 12.3 for mixing and handling. The sample container should be stored in a cool, dry place; exposure to direct sunlight should be avoided.

14.4.4 Alternatively, line samples may be taken at regular intervals and individually tested. The individual test results may be arithmetically averaged, adjusting for variations in flow rate during the agreed upon time period.

14.4.5 Either composite or arithmetically averaged results are acceptable by mutual agreement.

14.4.6 With either procedure, always label each sample and deliver to the laboratory in the container in which it was collected.

15. Dipper Sampling

15.1 *Application*—The dipper sampling procedure is applicable for sampling liquids of 13.8 kPa (2 psia) RVP or less and semi-liquids where a free or open discharge stream exists, as in small filling and transfer pipelines, 5 cm (2 in.) in diameter or less, and filling apparatus for barrels, packages, and cans.

15.2 *Apparatus*—Use a dipper with a flared bowl and a handle of conventional length made of a material such as tinned steel that will not affect the product being tested. The dipper should have a capacity suitable for the amount to be

collected and must be protected from dust and dirt when not being used. Use a clean, dry sample container of the desired size.

15.3 *Procedure*—Insert the dipper in the free-flowing stream so that a portion is collected from the full cross section of the stream. Take portions at time intervals chosen so that a complete sample proportional to the pumped quantity is collected. The gross amount of sample collected should be approximately 0.1 percent, but not more than 150 L (40 gal) of the total quantity being sampled. Transfer the portions into the sample container as soon as they are collected. Keep the container closed, except when pouring a dipper portion into it. As soon as all portions of the sample have been collected, close and label the sample container and deliver it to the laboratory.

16. Tube Sampling

16.1 *Application*—The tube sampling procedure is applicable for sampling liquids of 13.8 kPa (2 psia) RVP or less and semi-liquids in drums, barrels, and cans.

16.2 *Apparatus*—Either a glass or metal tube may be used, designed so that it will reach to within about 3 mm (⅛ in.) of the bottom of the container. Capacity of the tube can vary from 500 mL to 1 L (1 pt to 1 qt). A metal tube suitable for sampling 189 L (50-gal) drums is shown in Fig. 9. Two rings soldered to opposite sides of the tube at the upper end are convenient for holding it by slipping two fingers through the rings, thus leaving the thumb free to close the opening. Use clean, dry cans, or glass bottles for sample containers.

16.3 *Procedure*:

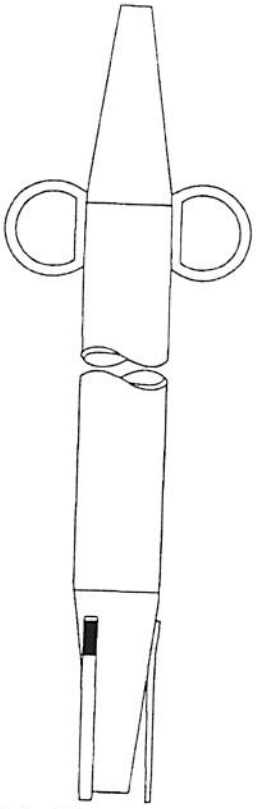

FIG. 9 Typical Drum or Barrel Sampler

16.3.1 Place the drum or barrel on its side with the bung up. If the drum does not have a side bung, stand it upright and sample from the top. If detection of water, rust, or other insoluble contaminants is desired, let the barrel or drum remain in this position long enough to permit the contaminants to settle. Remove the bung and place it beside the bung hole with the oily side up. Close the upper end of the clean, dry sampling tube with the thumb, and lower the tube into the oil to a depth of about 30 cm (1 ft). Remove the thumb, allowing oil to flow into the tube. Again, close the upper end with the thumb and withdraw the tube. Rinse the tube with the oil by holding it nearly horizontal and turning it so that the oil comes in contact with that part of the inside surface that will be immersed when the sample is taken. Avoid handling any part of the tube that will be immersed in the oil during the sampling operation. Discard the rinse oil and allow the tube to drain. Insert the tube into the oil again, holding the thumb against the upper end. (If an all-levels sample is desired, insert the tube with the upper end open.) When the tube reaches the bottom, remove the thumb and allow the tube to fill. Replace the thumb, withdraw the tube quickly, and transfer the contents to the sample container. Do not allow the hands to come in contact with any part of the sample. Close the sample container; replace and tighten the bung in the drum or barrel. Label the sample container and deliver it to the laboratory.

16.3.2 Obtain samples from cans of 18.9 L (5 gal) capacity or larger in the same manner as for drums and barrels, using a tube of proportionately smaller dimensions. For cans of less than a 18.9-L (5-gal) capacity, use the entire contents as the sample, selecting cans at random as indicated in Table 4 or in accordance with the agreement between the purchaser and the seller.

17. Boring Sampling

17.1 *Application*—The boring sampling procedure is applicable for sampling waxes and soft solids in barrels, cases, bags, and cakes when they cannot be melted and sampled as liquids.

17.2 *Apparatus*:

17.2.1 Use a ship auger 2 cm (¾ in.) in diameter (preferred), similar to that shown in Fig. 10, and of sufficient length to pass through the material to be sampled.

17.2.2 Use clean, wide-mouth metal containers or glass jars with covers for cover sample containers.

17.3 *Procedure*—Remove the heads or covers of barrels or cases. Open bags and wrappings of cakes. Remove any dirt, sticks, string, or other foreign substances from the surface of the material. Bore three test holes through the body of the material, one at the center, the other two halfway between the center and the edge of the package on the right and left sides, respectively. If any foreign matter is removed from the interior of the material during the boring operation, include it as part of the borings. Put the three sets of borings in individual sample containers, label, and deliver them to the laboratory.

17.4 *Laboratory Inspection*—If there are any visible differences in the samples, examine and test each set of borings at

FIG. 10 Ship Auger for Boring Procedure

the laboratory. Otherwise, combine the three sets of borings into one sample. If subdivision of borings is desired, chill, pulverize (if necessary), mix, and quarter the borings until reduced to the desired amount.

18. Grab Sampling

18.1 *Application*—The grab sampling procedure is applicable for sampling all lumpy solids in bins, bunkers, freight cars, barrels, bags, boxes, and conveyors. It is particularly applicable for the collection of green petroleum coke samples from railroad cars and for the preparation of such samples for laboratory analysis. Refer to Practice D 346 when other methods of shipping or handling are used. Petroleum coke may be sampled while being loaded into railroad cars from piles or after being loaded into railroad cars from coking drums.

18.2 *Apparatus*—A polyethylene pail of approximately 9.5 L (10 qt) capacity shall be used as the sample container. Use a stainless steel or aluminum No. 2 size scoop to fill the container.

18.3 *Procedure*—Lumpy solids are usually heterogeneous and difficult to sample accurately. It is preferable to take samples during the unloading of cars or during transit; obtain a number of portions at frequent and regular intervals and combine them.

18.3.1 *Sampling From Railroad Cars*—Use one of the following procedures:

18.3.1.1 *Cars Being Loaded from a Pile*— Take a full scoop of sample at each of the five sampling points shown in Fig. 11, and deposit in a polyethylene pail. Cover the sample, and deliver it to the laboratory. Each sampling point shall be located equidistant from the sides of the railroad car.

18.3.1.2 *After Direct Loading from Coking Drums*—At any five of the sampling points shown in Fig. 12, take a full scoop of coke from about 30 cm (1 ft) below the surface, and deposit it in a polyethylene pail. Cover the sample and deliver it to the laboratory.

18.3.2 *Sampling From Conveyors*—Take one scoop for each 7 to 9 metric tons (8 to 10 short tons) of coke transported. These samples may be handled separately or composited after all samples representing the lot have been taken.

18.3.3 *Sampling From Bags, Barrels, or Boxes*:

18.3.3.1 Obtain portions from a number of packages selected at random as shown in Table 3, or in accordance with the agreement between the purchaser and seller.

18.3.3.2 Carefully mix the grab sample and reduce it in size to a convenient laboratory sample by the quartering procedure described in Practice D 346. Perform the quartering operation

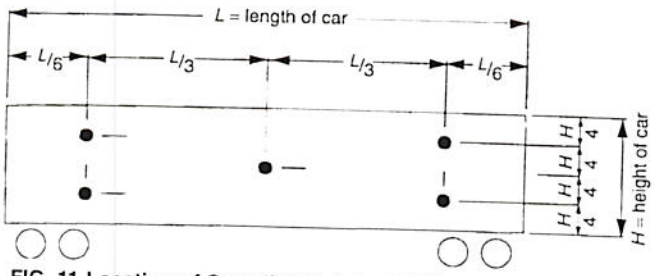

FIG. 11 Location of Sampling Points at Different Levels for Rail Cars

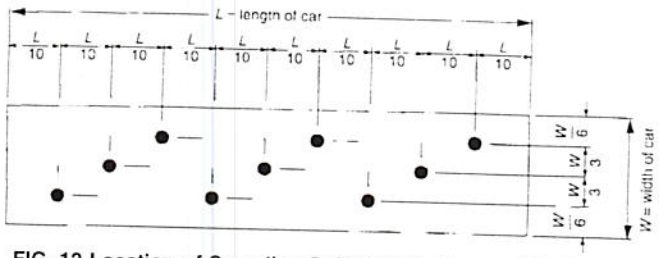

FIG. 12 Location of Sampling Points from Exposed Surface for Rail Cars

on a hard, clean surface, free from cracks, and protected from rain, snow, wind, and sun. Avoid contamination with cinders, sand, chips from the floor, or any other material. Protect the sample from loss or gain of moisture or dust. Mix and spread the sample in a circular layer, and divide it into quadrants. Combine two opposite quadrants to form a representative reduced sample. If this sample is still too large for laboratory purposes, repeat the quartering operation. In this manner, the sample will finally be reduced to a representative, suitable size for laboratory purposes. Label and deliver the sample to the laboratory in a suitable container.

19. Grease Sampling

19.1 *Application*—This method covers practices for obtaining samples representative of production lots or shipments of lubricating greases or of soft waxes or soft bitumens similar to grease in consistency. This procedure is quite general because a wide variety of conditions are often encountered, and the procedure may have to be modified to meet individual specifications. Proceed in accordance with Sections 7 and 6, particularly those paragraphs pertaining to precautions, care and cleanliness, except where they conflict with instructions given in this section.

19.2 *Inspection*:

19.2.1 If the material is a lubricating grease and inspection is made at the manufacturing plant, take samples from finished shipping containers of each production batch or lot. Never take grease samples directly from grease kettles, cooling pans, tanks, or processing equipment. Do not sample the grease until it has cooled to a temperature not more than 9.4°C (15°F) above that of the air surrounding the containers and until it has been in the finished containers for at least 12 h. When the containers for a production batch of grease are of different sizes, treat the grease in each size of container as a separate lot. When inspection is made at the place of delivery, obtain a sample from each shipment. If a shipment consists of containers from more than one production batch (lot numbers), sample each batch separately.

19.2.2 If the material being inspected is of grease-like consistency, but is not actually a lubricating grease but some mixture of heavy hydrocarbons, such as microcrystalline waxes or soft bitumens, it is permissible to take samples from pans, tanks, or other processing equipment, as well as from containers of the finished product. The grease sampling method shall be applicable to such stocks only if for some reason it is not possible to apply heat and convert the material into a true liquid.

19.3 *Sample Size*—Select containers at random from each lot or shipment to give the required quantity specified in Table 8.

19.4 *Procedure*:

19.4.1 Examine the opened containers to determine whether the grease is homogeneous, comparing the grease nearest the outer surfaces of the container with that in the center, at least 15 cm (6 in.) below the top surface, for texture and consistency. When more than one container of a lot or shipment is opened, compare the grease in all open containers.

19.4.2 If no marked difference in the grease is found, take one portion from the approximate center and at least 6.5 cm (3 in.) below the surface of each opened container in sufficient quantity to provide a composite sample of the desired quantity (see Table 8). Withdraw portions with a clean scoop, large spoon, or spatula, and place them in a clean container. Very soft, semi-fluid greases may be sampled by dipping with a 0.45 kg (1 lb) can or suitable dipper. If any marked difference in the grease from the various locations of an opened container is found, take two separate samples of about 0.45 kg (1 lb) each, one from the top surface adjacent to the wall and the other from the center of the container, at least 15 cm (6 in.) below the top surface. If any marked variations are noted between different containers of a lot or shipment, take separate samples of about 0.45 (1 lb) from each container. When more than one sample of a batch or shipment is taken because of lack of uniformity, send them to the laboratory as separate samples.

TABLE 8 Size of Grease Samples

Container	Lot or Shipment	Minimum Sample
Tubes or packages, less than 0.45 Kg (1 lb)	All	enough units for a 4.4 Kg (2 lb) sample
0.45 Kg (1 lb) cans	All	three cans
2.3 or 4.6 Kg (5 or 10 lb) cans	All	one can
Larger than 4.6 Kg (10 lb)	less than 4536 Kg (10 000 lb)	1 to 1.4 Kg (2 to 3 lb) from one or more containers
Larger than 4.6 Kg (10 lb)	4536 to 22 680 Kg (10 000 to 50 000 lb)	1 to 2.3 Kg (2 to 5 lb) from two or more containers
Larger than 4.6 Kg (10 lb)	more than 22 680 Kg (50 000 lb)	1 to 2.3 Kg (2 to 5 lb) from three or more containers

19.4.3 If more than one portion is required to represent a lot or shipment of grease softer than 175 penetration (see Test Method D 217), prepare a composite sample by mixing equal portions thoroughly. Use a large spoon or spatula and a clean container. Avoid vigorous mixing or working of air into the grease. As grease samples become partially "worked" in being removed from containers, the procedure is not suitable for obtaining samples of greases softer than 175 penetration on which unworked penetration is to be determined. For greases having a penetration of less than 175, cut samples from each container with a knife in the form of blocks about 15 by 15 by 5 cm (6 by 6 by 2 in.). If required, make unworked penetration tests on blocks as procured and other inspection tests on grease cut from the blocks.

20. Keywords

20.1 boring sampling; bottle/beaker sampling; core thief spot sampling; dipper sampling; extended tube sampling; grab sampling; grease sampling; marine custody transfer; sample containers; sample handling; sample labeling; sample mixing; sample shipment; sampling; sampling cage; static sampling; stand pipes; tap sampling; tube sampling

ANNEX

(Mandatory Information)

A1. PRECAUTIONARY STATEMENTS

A1.1 The following substances may be used throughout the course of this standard test method. The precautionary statements should be read prior to use of such substances.

A1.1.1 *Benzene*:

A1.1.1.1 Keep away from heat, sparks, and open flame.

A1.1.1.2 Keep container closed.

A1.1.1.3 Use with adequate ventilation.

A1.1.1.4 Use fume hood whenever possible.

A1.1.1.5 Avoid build-up of vapors and eliminate all sources of ignition, especially non-explosion proof electrical apparatus and heaters.

A1.1.1.6 Avoid prolonged breathing of vapors or spray mist.

A1.1.1.7 Avoid contact with skin and eyes. Do not take internally.

A1.1.2 *Diluent (Naphtha)*:

A1.1.2.1 Keep away from heat, sparks, and open flame.

A1.1.2.2 Keep container closed.

A1.1.2.3 Use with adequate ventilation. Avoid build-up of vapors and eliminate all sources of ignition, especially non-explosion proof electrical apparatus and heaters.

A1.1.2.4 Avoid prolonged breathing of vapors or spray mist.

A1.1.2.5 Avoid prolonged or repeated skin contact.

A1.1.3 *Flammable Liquid (general)*:

A1.1.3.1 Keep away from heat, sparks, and open flame.

A1.1.3.2 Keep container closed.

A1.1.3.3 Use only with adequate ventilation.

A1.1.3.4 Avoid prolonged breathing of vapor or spray mist.

A1.1.3.5 Avoid prolonged or repeated contact with skin.

A1.1.4 *Gasoline (White)*:

A1.1.4.1 Harmful if absorbed through skin.

A1.1.4.2 Keep away from heat, sparks, and open flame.

A1.1.4.3 Keep container closed. Use with adequate ventilation.

A1.1.4.4 Avoid build-up of vapors and eliminate all sources of ignition especially non-explosion proof electrical apparatus and heaters.

A1.1.4.5 Avoid prolonged breathing of vapor or spray mist.

A1.1.4.6 Avoid prolonged or repeated skin contact.

A1.1.5 *Toluene and Xylene*:

A1.1.5.1 **Warning**—Flammable. Vapor harmful.

A1.1.5.2 Keep away from heat, sparks, and open flame.

A1.1.5.3 Keep container closed.

A1.1.5.4 Use with adequate ventilation. Avoid breathing of vapor or spray mist.

A1.1.5.5 Avoid prolonged or repeated contact with skin.

The American Society for Testing and Materials takes no position respecting the validity of any patent rights asserted in connection with any item mentioned in this standard. Users of this standard are expressly advised that determination of the validity of any such patent rights, and the risk of infringement of such rights, are entirely their own responsibility.

This standard is subject to revision at any time by the responsible technical committee and must be reviewed every five years and if not revised, either reapproved or withdrawn. Your comments are invited either for revision of this standard or for additional standards and should be addressed to ASTM Headquarters. Your comments will receive careful consideration at a meeting of the responsible technical committee, which you may attend. If you feel that your comments have not received a fair hearing you should make your views known to the ASTM Committee on Standards, at the address shown below.

This standard is copyrighted by ASTM, 100 Barr Harbor Drive, PO Box C700, West Conshohocken, PA 19428-2959, United States. Individual reprints (single or multiple copies) of this standard may be obtained by contacting ASTM at the above address or at 610-832-9585 (phone), 610-832-9555 (fax), or service@astm.org (e-mail); or through the ASTM website (www.astm.org).

ANEJO C

ESTADO LIBRE ASOCIADO DE PUERTO RICO
Autoridad de Energía Eléctrica de Puerto Rico

Héctor R. Rosario, M.B.A., C.P.A.
Director Ejecutivo

24 de enero de 2003

Luis Figueroa Báez
Director de Finanzas

Héctor R. Rosario
Director Ejecutivo

INFORME DE AUDITORÍA CP-02-26

La Oficina del Contralor de Puerto Rico realizó una auditoría de las operaciones fiscales en la Oficina de Combustible de la Autoridad de Energía Eléctrica. El informe de auditoría (CP-02-26) contiene los resultados del examen de varios aspectos relacionados con las compras y entregas de combustible para generar energía eléctrica, la contratación de laboratorios privados, el funcionamiento del laboratorio interno y el arrendamiento de tanques para almacenar combustible. El período auditado cubrió desde el 1 de enero de 1998 al 30 de junio de 2001. El informe emitido contiene recomendaciones con relación a los hallazgos de la auditoría. La Autoridad tiene que cumplir con dichas recomendaciones para así evitar irregularidades en nuestro servicio.

Como Director de Finanzas debe impartir instrucciones y hacer cumplir las normas y procedimientos establecidos, que apliquen en su directorado. Por tal razón, debe impartir instrucciones para que no se deje de cumplir con nuestros procedimientos.

La Recomendación 10a del informe nos indica que el Director de Finanzas debe realizar una preintervención adecuada de las solicitudes de servicios, las facturas y demás justificantes relacionados con los pagos a laboratorios por las pruebas de composición química y de calidad de los combustibles. Actualmente, la Oficina de Combustible envía las facturas y los documentos relacionados con las mismas al Directorado de Finanzas, Sección de Comprobantes de Desembolsos. Incluyen en éstos las certificaciones realizadas por el suplidor, factura del suplidor, factura

APARTADO 364267 SAN JUAN, PUERTO RICO 00936-4267 TELÉFONO: (787) 289-4666 TELEFAX: (787) 289-4665
"Somos un patrono con igualdad de oportunidades de empleo y no discriminamos por razón de raza, color, sexo, religión, nacionalidad, edad, ideas políticas, impedimento físico o mental y condición de veterano de la Era de Vietnam o veterano con impedimentos."

preparada por la Oficina de Combustible, los informes de recibo de la central y los documentos relacionados con el volumen, temperatura y cantidades de la barcaza. Debe asegurase que la Sección de Comprobantes de Desembolsos verifique que reciban todos los documentos relacionados con los servicios prestados por los laboratorios privados antes de preparar los desembolsos correspondientes.

La Oficina de Estudios y Procedimientos, junto a la Oficina de Combustible, prepararon el Procedimiento de Recobro por Uso de Tanques de Combustible regulando las operaciones relacionadas con el uso y recobro de las facilidades de los tanques arrendados a solicitud de la Oficina del Contralor en la recomendación 13. En el procedimiento acordaron que las funciones de recibo de pagos las realizará el Departamento de Administración de Fondos e Inversiones de la División de Tesorería y éstos deberán informarle a la Oficina de Combustible el recibo del mismo. Debe verificar el cumplimiento de este procedimiento en su directorado.

De necesitar información adicional sobre las recomendaciones a implantar puede comunicarse al 4812, 4823, con el Sr. José F. Hernández Colón, Administrador Interino de la Oficina de Auditoría Interna.

HRR/JHC/ejs

ANEJO D

CN 078-04-79
REV. 1/01

ESTADO LIBRE ASOCIADO DE PUERTO RICO
AUTORIDAD DE ENERGÍA ELÉCTRICA DE PUERTO RICO

SAN JUAN, PUERTO RICO

www.aeepr.com

APARTADO 364267
CORREO GENERAL
SAN JUAN, PUERTO RICO 00936-4267

16 de enero de 2003

Jefes de División, Administradores
y Supervisores de Departamento
Directorado de Servicios Administrativos

REGISTRO ÚNICO DE LICITADORES – LEY NÚM. 85 DEL
18 DE JUNIO DE 2002

El 18 de junio de 2002 se aprobó la Ley Núm. 85, supra. Ésta enmendó la Ley de la Administración de Servicios Generales, Ley Núm. 164 del 23 de julio de 1974, para conceder a dicha entidad gubernamental la facultad de mantener un Registro Único de Licitadores mandatorio para todas las agencias y corporaciones públicas de la Rama Ejecutiva.

Esta nueva legislación requiere el ingreso al Registro Único de Licitadores de toda persona natural o jurídica que interese participar en los procesos de adquisición de bienes y servicios no profesionales en cualquier agencia o corporación pública de la Rama Ejecutiva.

La Administración de Servicios Generales quien custodiará y mantendrá en sus expedientes los documentos necesarios para cumplir con los requisitos de ingreso al Registro, entre los que se encuentran las siguientes certificaciones:

- Departamento de Hacienda
- Centro de Recaudaciones de Ingresos Municipales
- Departamento del Trabajo y Recursos Humanos
- Corporación del Fondo del Seguro del Estado
- Administración para el Sustento de Menores

La Autoridad, como corporación pública de la Rama Ejecutiva, tendrá la obligación de requerir a los licitadores el Certificado de Elegibilidad que tiene que expedir la Administración de Servicios Generales, el mismo acredita el cumplimiento, por parte del licitador, con los requisitos establecidos mediante el reglamento para pertenecer al

"Somos un patrono con igualdad de oportunidades de empleo y no discriminamos por razón de raza, color, sexo, religión, nacionalidad, edad, ideas políticas, condición física o mental y condición de veterano de la Era de Vietnam o veterano con impedimentos"

Registro Único de Licitadores y, por ende, participar en los procesos de adquisición de una agencia o corporación pública. Dicho certificado es para mantenerlo en el expediente de cada adquisición de bienes o servicios no profesionales.

Incluimos copia de la Ley y de la Carta Circular OC-03-03 del Contralor de Puerto Rico, del 25 de octubre de 2002. Esperamos que transmitan esta información a todo el personal de sus áreas de trabajo que participan en el trámite de adquisición de bienes y servicios no profesionales para el fiel cumplimiento de la misma.

Wilfredo Pantojas Reyes
Director de Servicios Administrativos

Anejos